Restraint > General Information > General Information

General Information

The supplemental restraint system (SRS) is designed to supplement the seat belt to help reduce the risk or severity of injury to the driver and passenger by activating and deploying the driver, passenger, side airbag and belt pretensioner in certain frontal or side collisions.
The SRS (Airbag) consists of ; a driver side airbag module located in the center of the steering wheel, which contains the folded cushion and an inflator unit ; a passenger side airbag module located in the passenger side crash pad contains the folded cushion assembled with inflator unit ; side airbag modules located in the front seat contain the folded cushion and an inflator unit ; curtain airbag modules located inside of the headliner which contains folded cushions and inflator units. The impact sensing function of the SRSCM is carried out by electronic accelerometer that continuously measure the vehicle's acceleration and delivers a corresponding signal through amplifying and filtering circuitry to the microprocessor.

SRSCM (SRS Control Module)

SRSCM will detect front impact with front impact sensor, and side impact with side impact sensor, and determine airbag module deployment.

1. DC/DC converter: DC/DC converter in power supply unit includes up/down transformer converter, and provide ignition voltage for 2 front airbag ignition circuits and the internal operation voltage of the SRSCM. If the internal operation voltage is below critical value setting, it will perform resetting.
2. Back up power supply: SRSCM has separate back up power supply, that will supply deployment energy instantly in low voltage condition or upon power failure by front crash.
3. Self diagnosis: SRSCM will constantly monitor current SRS operation status and detect system failure while vehicle power supply is on, system failure may be checked with trouble codes using GDS.
4. Airbag warning lamp on: Upon detecting error, the module will transmit signal to SRSCM indicator lamp located at cluster. MIL lamp will indicate driver SRS error. Upon ignition key on, SRS lamp will turn on for about six seconds.
5. Trouble code registration: Upon error occurrence in system, SRSCM will store DTC corresponding to the error. DTC can be cleared only by GDS. However, if an internal fault code is logged or if a crash is recorded the fault clearing should not happen.
6. Self diagnostic connector: Data stored in SRSCM memory will be output to GDS or other external output devices through connector located below driver side crash pad.
7. Once airbag is deployed, SRSCM should not be used again but replaced.
8. SRSCM will determine whether passenger put on seat belt by the signal from built-in switch in seat belt buckle, and deploy front seat airbag at each set crash speed.
9. Side airbag deployment will be determined by SRSCM that will detect satellite sensor impact signal upon side crash, irrespective to seat belt condition.
10. Vehicle on an even surface not to be damaged the rollover sensor.
    Ignition switched off during the SRSCM repair procedure.
11. Check for the normal operation of SRSCM after repair procedure.

Restraint > General Information > Specifications

Specification

Item	Resistance (Ω)
Driver Airbag (DAB)	1.5 ~ 6.0
Passenger Airbag (PAB)	1.5 ~ 6.0
Side Airbag (SAB)	1.5 ~ 6.0
Curtain Airbag (CAB)	1.5 ~ 6.0
Seat Belt Pretensioner (BPT)	1.5 ~ 6.0

Tightening Torques

Item	N.m	kgf.m	lb-ft
Driver Airbag (DAB)	7.8 ~ 10.8	0.8 ~ 1.1	5.8 ~ 8.0
Passenger Airbag (PAB)	7.8 ~ 11.8	0.8 ~ 1.2	5.8 ~ 8.7
Curtain Airbag (CAB)	7.0 ~ 9.0	0.7 ~ 0.9	5.1 ~ 6.6
Seat Belt Anchor Bolt	39.2 ~ 53.9	4.0 ~5.5	28.9 ~ 39.8
SRSCM	6.8 ~ 9.2	0.7 ~ 0.9	5.0 ~ 6.8
Front Impact Sensor (FIS) Mounting Bolt	7.0 ~ 9.0	0.7 ~ 0.9	5.1 ~ 6.6
Pressure Side Impact Sensor (PSIS) Mounting Screw	1.1 ~1.3	0.11 ~1.3	0.7 ~ 1.0
Side Impact Sensor (SIS) Mounting Bolt	7.0 ~ 9.0	0.7 ~ 0.9	5.1 ~ 6.6

mcx30.com

Restraint > General Information > Special Service Tools

Special Service Tools

Tool(Number and Name)	Illustration	Use
Deployment tool 0957A-34100A	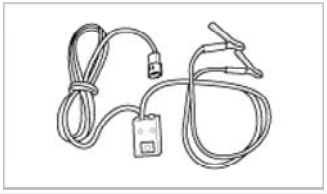	Airbag deployment tool.
Deployment adapter 0957A-38510	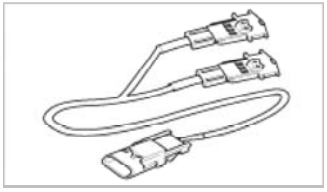	Use with deployment tool. (DAB, PAB)
Deployment adapter 0957A-3F100	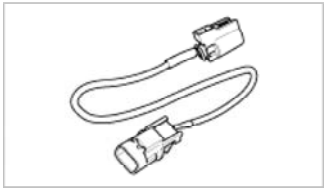	Use with deployment tool. (SAB)
Deployment adapter 0957A-38500	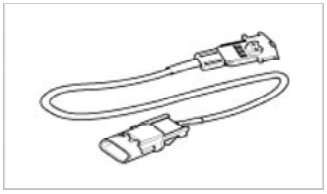	Use with deployment tool. (CAB, BPT)
Dummy 0957A-38200	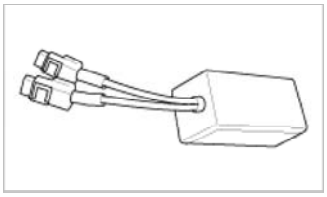	Simulator to check the resistanceof each wiring harness.
Dummy adapter 0957A-3F000	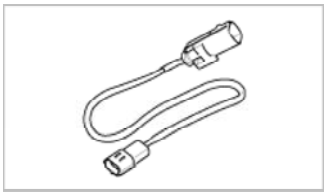	Use with dummy (SAB)
Dummy adapter 0957A-2G000		Use with dummy (DAB, PAB, CAB, BPT)

DAB : Driver Airbag
PAB : Passenger Airbag
SAB : Side Airbag
CAB : Curtain Airbag
BPT : Seat Belt Pretensioner

Restraint > General Information > General Safety Information and Caution

Precautions

General Precautions

mcx30.com

- Except when performing electrical inspections, always turn the ignition switch OFF and disconnect the negative cable from the battery, and wait at least three minutes before beginning work.

> **NOTE**
>
> The contents in the memory are not erased even if the ignition switch is turned OFF or the battery cables are disconnected from the battery.

- Use the replacement parts which are manufactured to the same standards as the original parts and quality.
  Do not install used SRS parts from another vehicle. Use only new parts when making SRS repairs.
- Carefully inspect any SRS part before you install it. Do not install any part that shows signs of being dropped or improperly handled, such as dents, cracks or deformation.

- Before removing any of the SRSCM parts (including the disconnection of the connectors), always disconnect the SRSCM connector.

Airbag Handling and Storage

Do not disassemble the airbags; it has no serviceable parts. Once an airbag has been deployed, it cannot be repaired or reused.
For temporary storage of the air bag during service, please observe the following precautions.

- Store the removed airbag with the pad surface up.
- Keep free from any oil, grease, detergent, or water to prevent damage to the airbag assembly.

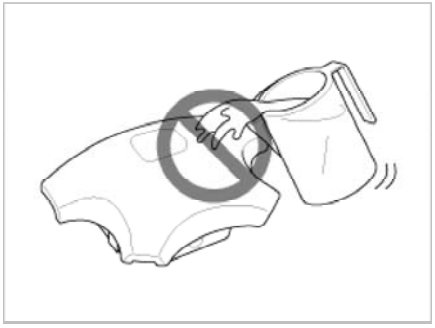

- Store the removed airbag on secure, flat surface away from any high heat source (exceeding 85 C/185 F).
- Never perform electrical inspections to the airbags, such as measuring resistance.
- Do not position yourself in front of the airbag assembly during removal, inspection, or replacement.
- Refer to the scrapping procedures for disposal of the damaged airbag.
- Be careful not to bump or impact the SRS unit or the side impact sensors or front impact sensors whenever the ignition switch is ON, wait at least three minutes after the ignition switch is turned OFF before begin work.
- During installation or replacement, be careful not to bump (by impact wrench, hammer, etc.) the area around the SRS unit and the side impact sensor and the front impact sensors. The airbags could accidentally deploy and cause damage or injury.
- Replace the front airbag module, SRSCM, FIS when deploying the front airbag. Replace the airbag wiring when the airbag wiring get damaged. Replace the side airbag module, the curtain airbag module, SRSCM, SIS when deploying the side airbag. Replace the airbag when the airbag wiring get damaged.
- After a collision in which the airbags or the side air bags did not deploy, inspect for any damage or any deformation on the SRS unit and the side impact sensors. If there is any damage, replace the SRS unit, the front impact sensor and/or the side impact sensors.
- Do not disassemble the SRS unit, the front impact sensor or the side impact sensors.
- Turn the ignition switch OFF, disconnect the battery negative cable and wait at least three minutes before beginning installation or replacement of the SRS unit.
- Be sure the SRS unit, the front impact sensor and side impact sensors are installed securely with the mounting bolts.
- Do not spill water or oil on the SRS unit, or the front impact sensor or the side impact sensors and keep them away from dust.
- Store the SRS unit, the front impact sensor and the side impact sensors in a cool (15 ~ 25 C/ 59 ~ 77 F) and dry (30 ~ 80% relative humidity, no moisture) area.

Wiring Precautions

SRS wiring can be identified by special yellow outer covering Observe the instructions described in this section.

- Never attempt to modify, splice, or repair SRS wiring. If there is an open or damage in SRS wiring, replace the harness.

mcx30.com

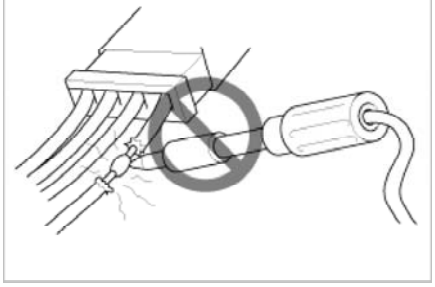

- Be sure to install the harness wires so that they are not pinched, or interfere with other parts.

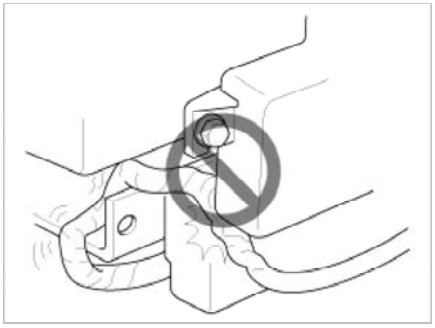

- Make sure all SRS ground locations are clean, and grounds are securely fastened for optimum metal-to-metal contact. Poor grounding can cause intermittent problems that are difficult to diagnose.

Precautions for Electrical Inspections

- When using electrical test equipment, insert the probe of the tester into the wire side of the connector.
  Do not insert the probe of the tester into the terminal side of the connector, and do not tamper with the connector.

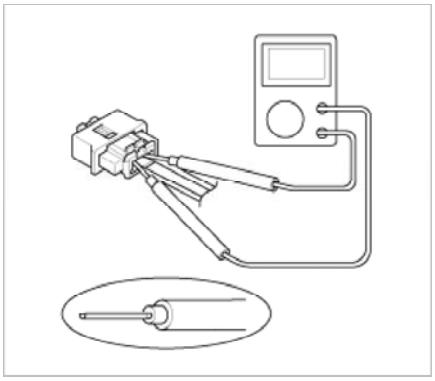

- Use a u-shaped probe. Do not insert the probe forcibly.
- Use specified service connectors for troubleshooting.
  Using improper tools could cause an error in inspection due to poor metal contact.

Spring-laded Lock Connector

Some SRS system connectors have a spring-loaded lock.

Airbag Connector

Disconnecting

To release the lock, pull the spring-loaded sleeve (A) and he slider (B), while holding the opposite half of the connector.
Pull the connector halves apart. Be sure to pull on the sleeve and not on the connector half.

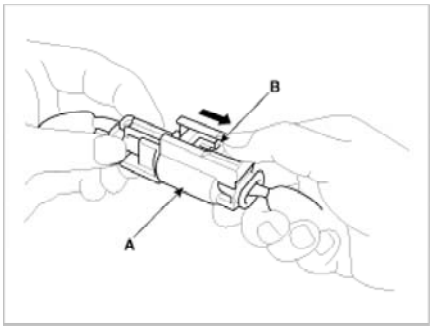

Connecting

Hold both connector halves and press firmly until the projection(C) of the sleeve-side connector clicks to lock.

mcx30.com

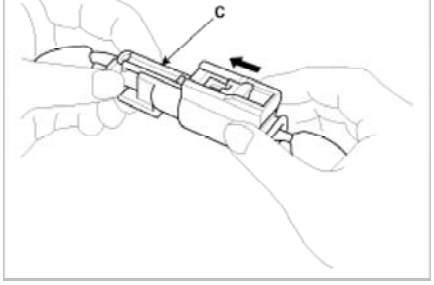

Restraint > General Information > Description and Operation

Warning Lamp Activation

Warning Lamp Behavior after Ignition On

As soon as the operating voltage is applied to the SRSCM ignition input, the SRSCM activates the warning lamp for a LED lamp check.
The lamp shall turn on for 6 seconds during the initialization phase and be turned off afterward.
However, in order to indicate the driver, the warning lamp shall turn on for 6 seconds and off for one second then on continuously after the operating voltage is applied if any active fault exists.

1. Active fault or historical fault counter is greater or equal to 10.

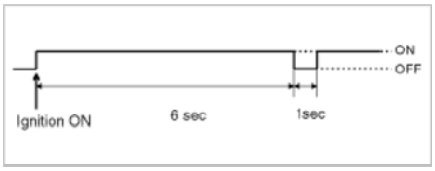

2. Normal or historical fault counter is less than 10.

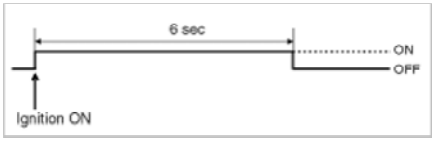

3. When turning the ignition switch ON during variant coding (EOL) mode, the airbag warning lamp is turned on and blinks at intervals of 1 second till the coding is completed.
   In case the variant coding is normally completed, the airbag warning lamp is turned on for 6 seconds, and then turned off. Otherwise the airbag warning lamp continuously blinks at intervals of 1 second.
   (1) In case the variant coding is normally completed

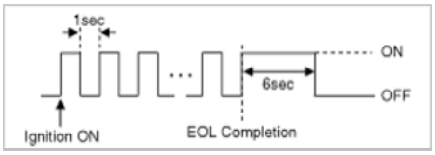

   (2) In case the variant coding is not completed

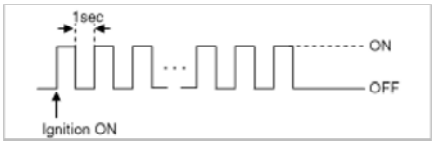

   When there is active fault in airbag system or SRSCM internal fault, the variant coding (EOL) can't be completed. In this case, do the variant coding (EOL) procedure again after troubleshooting with the GDS.

SRSCM Independent Warning Lamp Activation

There are certain fault conditions in which the SRSCM cannot function and thus cannot control the operation of the standard warning lamp. In these cases, the standard warning lamp is directly activated by appropriate circuitry that operates independently of the SRSCM. These cases are:

1. Loss of battery supply to the SRSCM : warning lamp turned on continuously.
2. Loss of internal operating voltage : warning lamp turned on continuously.
3. Loss of Microprocessor operation : warning lamp turned on continuously.
4. SRSCM not connected : warning lamp turned on continuously.

Telltale Lamp Activation

The Telltale Lamp indicates the Passenger Airbag(PAB) enabled and disabled status based on occupant status of passenger seat. If the passenger seat is empty or occupied with child (or child seat), the Passenger Airbag is disabled and the Telltale Lamp is turned ON to inform the driver that the PAB is disabled. As soon as operating voltage is applied to the SRSCM ignition input, the SRSCM activates telltale lamp

mcx30.com

After ignition on, telltale lamp will turn on for 4 seconds and turn off for 3 seconds during the initialization phase and be turned NO afterward until receipt of valid enabled message from PODS system.

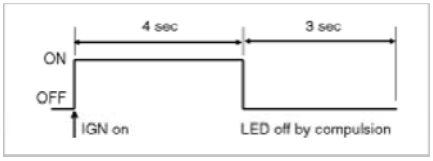

Restraint > General Information > Repair procedures

Component Replacement After Deployment

NOTE

Before doing any SRS repairs, use the GDS Pro to check for DTCs. Refer to the Diagnostic Trouble Code list for repairing of the related DTCs.

When the front airbag(s) deployed after a collision, replace the following items.
- SRSCM
- Deployed airbag(s)
- Seat belt pretensioner(s)
- Front impact sensors
- SRS wiring harnesses
- Inspect the clock spring for heat damage.
  If any damage found, replace the clock spring.

When the side/curtain airbag(s) deployed after a collision, replace the following items.
- SRSCM
- Deployed airbag(s)
- Side impact sensor(s) for the deployed side(s)
- SRS wiring harnesses

After the vehicle is completely repaired, confirm the SRS airbag system is OK.
- Turn the ignition switch ON; the SRS indicator should come on for about six seconds and then go off.

Restraint > General Information > Components and Components Location

Components

mcx30.com

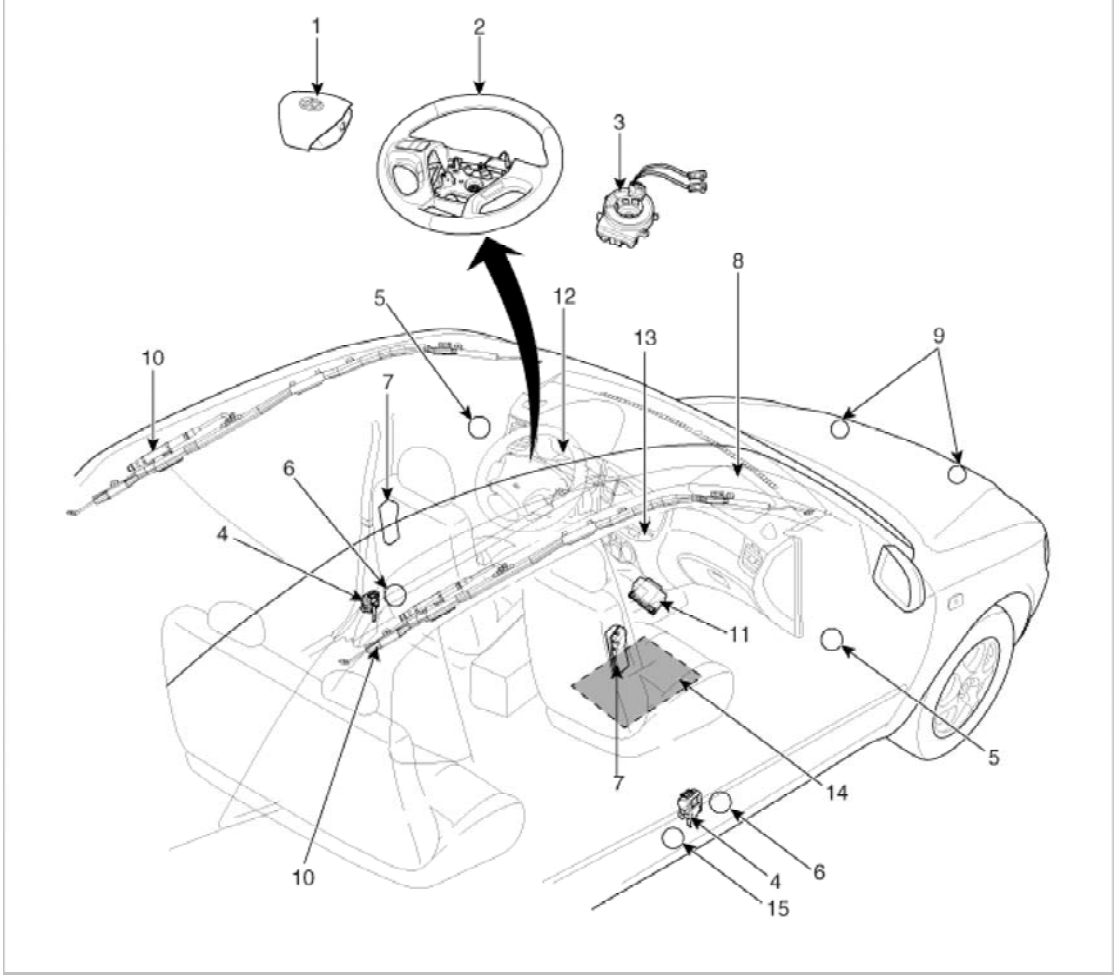

1. Driver Airbag (DAB) 2. Steering Wheel 3. Clock Spring 4. Seat Belt Pretensioner (BPT) 5. Pressure Side Impact Sensor (P-SIS) 6. Side Impact Sensor (SIS) 7. Side Airbag (SAB) 8. Passenger Airbag (PAB)	9. Front Impact Sensor (FIS) 10. Curtain Airbag (CAB) 11. Supplemental Restraint System Control Module(SRSCM) 12. Airbag Warning Lamp 13. Telltale Lamp 14. Passenger Occupant Detecting System (PODS) 15. Belt Tension Sensor

Components Location

Supplemental Restraint System Control Module (SRSCM)

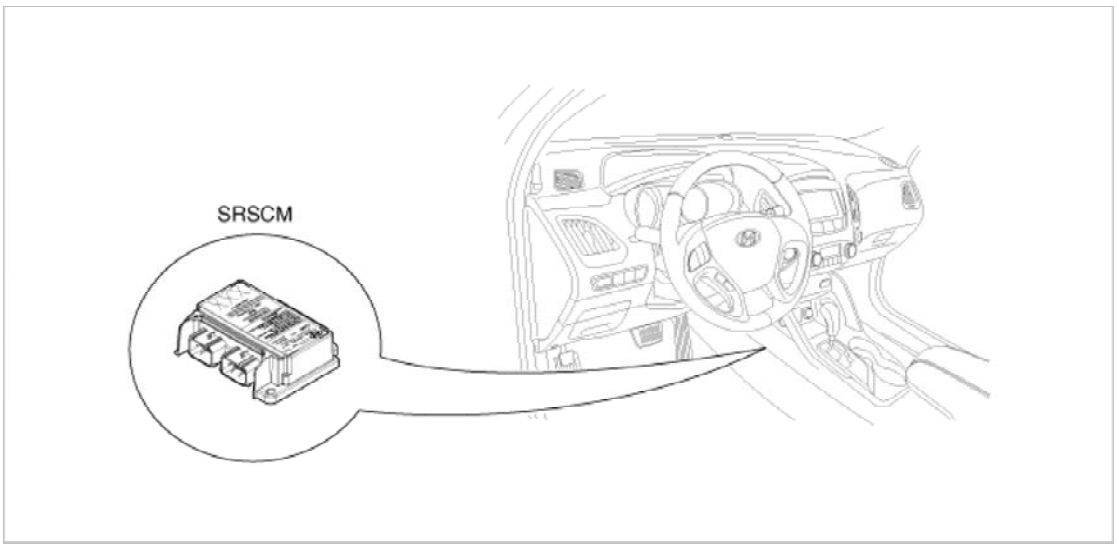

mcx30.com

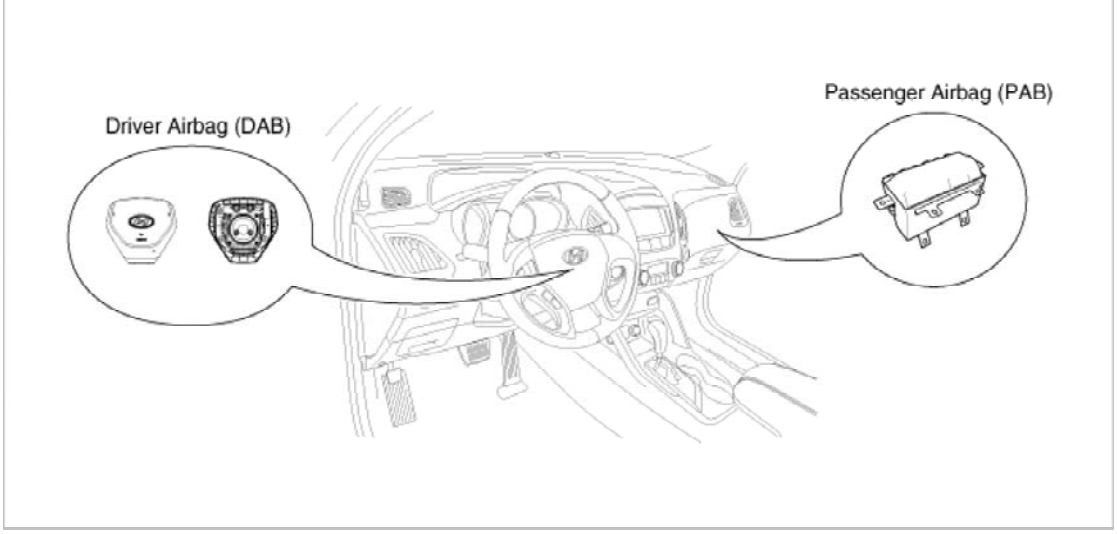

Side Airbag (SAB)

Curtain Airbag (CAB)

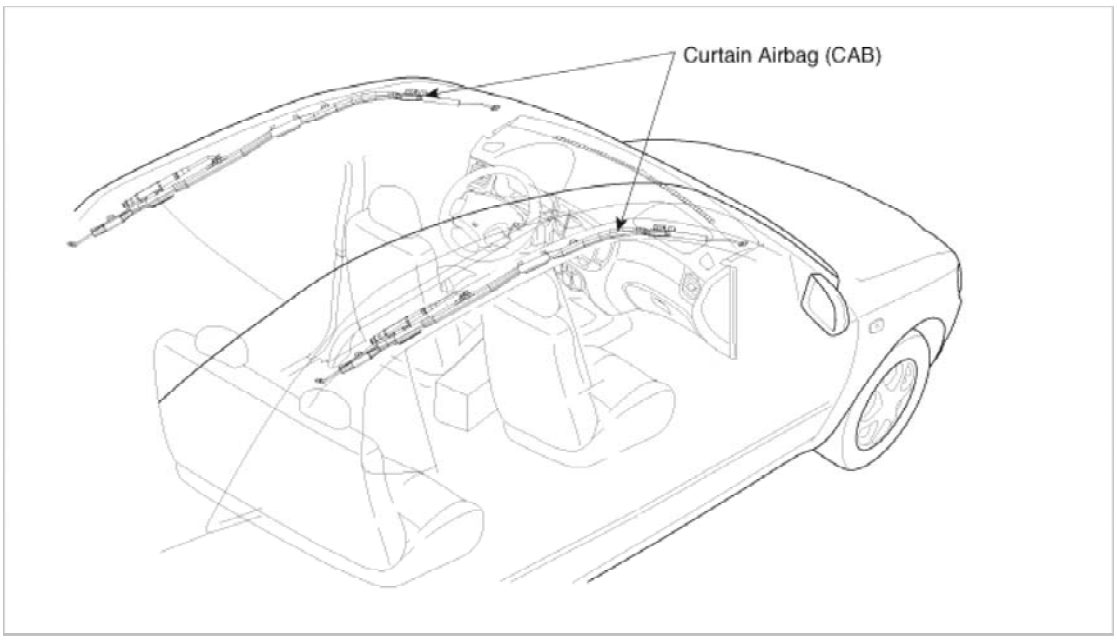

Seat Belt Pretensioner (BPT)

mcx30.com

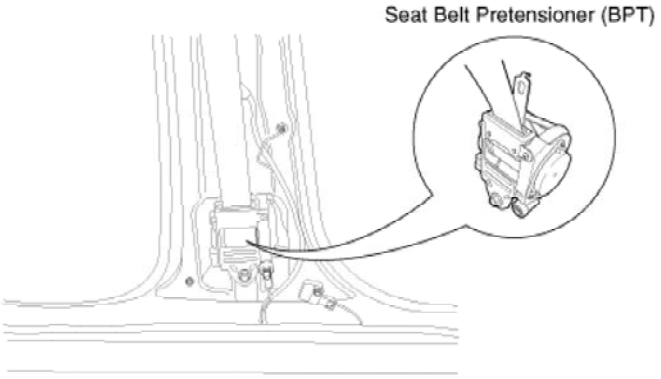

Front Impact Sensor (FIS)

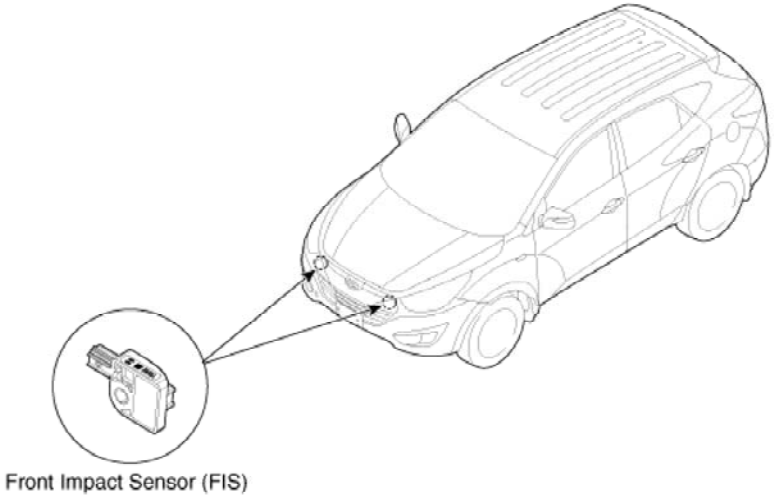

Side Impact Sensor (SIS)

mcx30.com

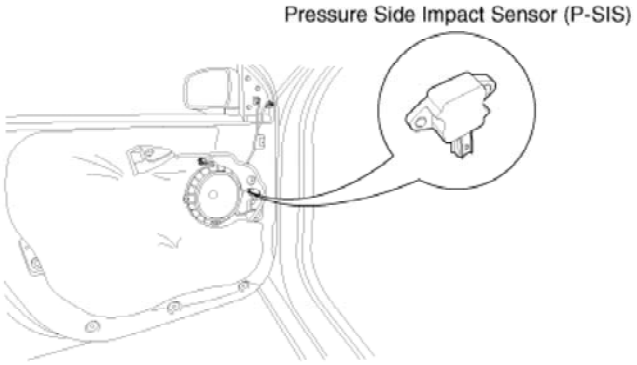

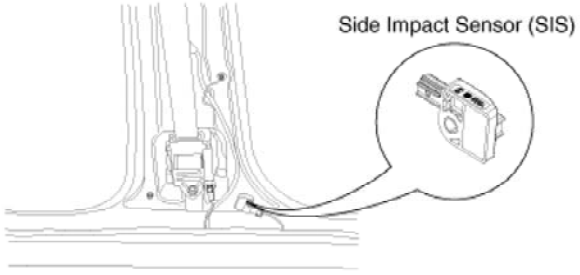

Restraint > SRSCM > SRS Control Module (SRSCM) > Description and Operation

Description

The primary purpose of the SRSCM (Supplemental Restraints System Control Module) is to discriminate between an event that warrants restraint system deployment and an event that does not. The SRSCM must decide whether to deploy the restraint system or not. After determining that pretensioners and/or airbag deployment is required, the SRSCM must supply sufficient power to the pretensioners and airbag igniters to initiate deployment.
The SRSCM determines that an impact may require deployment of the pretensioners and airbags from data obtained from impact sensors and other components in conjunction with a safing function.
The SRSCM will not be ready to detect a crash or to activate the restraint system devices until the signals in the SRSCM circuitry stabilize.
It is possible that the SRSCM could activate the safety restraint devices in approximately 2 seconds but is guaranteed to fully function after prove-out is completed.
The SRSCM must perform a diagnostic routine and light a system readiness indicator at key-on. The system must perform a continuous diagnostic routine and provide fault annunciation through a warning lamp indicator in the event of fault detection. A serial diagnostic communication interface will be used to facilitate servicing of the restraint control system.

Restraint > SRSCM > SRS Control Module (SRSCM) > Components and Components Location

Components

mcx30.com

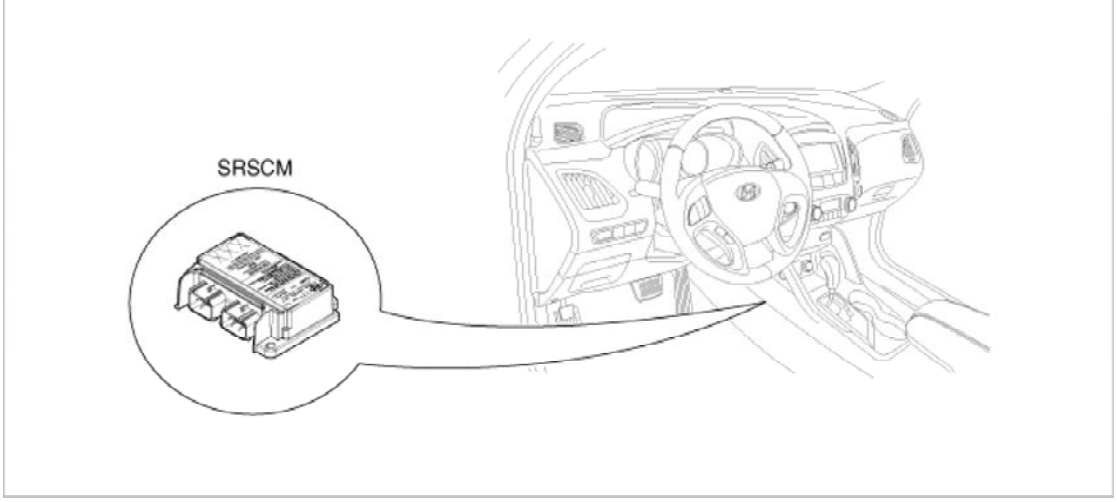

Restraint > SRSCM > SRS Control Module (SRSCM) > Repair procedures

Removal

1. Remove the ignition key from the vehicle.
2. Disconnect the battery negative cable and wait for at least three minutes before beginning work.
3. Disconnect the DAB, PAB, SAB, CAB and BPT connectors.
4. Remove the floor console. (Refer to the Body group - console)
5. Pull the lock (1) forward and then pull the lever (3) after pressing the lever lock (2).
   Disconnect the airbag system control module connector. (A and B)

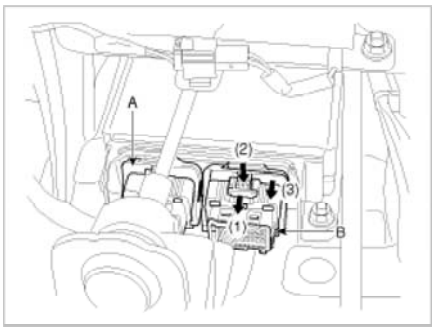

6. Remove the SRSCM mounting bolts(3EA) from the SRSCM, then remove the SRSCM.

> **CAUTION**
>
> You must remove or install SRSCM at the ignition switch OFF because SRSCM has overturn sensing function. SAB, CAB, BPT may be deployed if you shake SRSCM at the direction of up and down or right and left at the ignition switch ON.

Installation

1. Remove the ignition key from the vehicle.
2. Disconnect the battery negative cable and wait for at least three minutes before beginning work.
3. Install the SRSCM with the SRSCM mounting bolts.

Tightening torque
: 6.8 ~ 9.2 Nm (0.7 ~ 0.9 kgf.m, 5.0 ~ 6.8 lb.ft)

mcx30.com

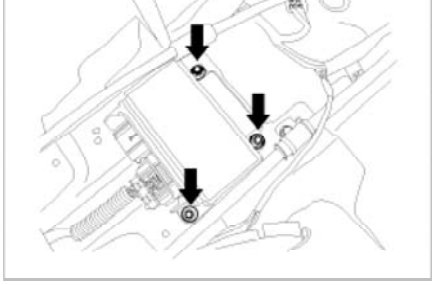

NOTE

Use new mounting bolts when replacing the SRSCM after a collision.

4. Connect the SRSCM harness connector.
5. Install the heater ducts and floor console. (Refer to the Body group - console)
6. Connect the DAB, PAB, SAB, CAB and BPT connectors.
7. Reconnect the battery negative cable.
8. After installing the SRSCM, confirm proper system operation:
   A. Turn the ignition switch ON; the SRS indicator light should be turned on for about six seconds and then go off.

CAUTION

SRSCM is sensing the vehicle rollover. SAB, CAB, BPT will be able to expanse if mechanic moves the SRSCM on vehicle during IGN ON state. For this reason, turn the IGN OFF surely and then remove the SRSCM from vehicle.

Variant coding

After replacing the SRSCM with a new one, must be performed the “Variant Coding” procedure.

NOTE

1. On SRSCM variant coding mode, the airbag warning lamp is periodically blinking (ON: 0.5sec., OFF: 0.5sec.) until the coding is normally completed.
2. If the variant coding is failed, DTC B1762 (ACU Coding Error) will be displayed and the warning lamp will be turned on.
   In this case, perform the variant coding procedure again after confirming the cause in “DTC Fault State Information”.
   Variant Coding can be performed up to 255 times, but if the number of coding work exceeds 255 times, DTC B1683 (Exceed Maximum coding Number) will be displayed and SRSCM must be replaced.
3. If the battery voltage is low (less than 9V), DTC B1102 will be displayed. In this case, charge the battery before anything else, and then perform the variant coding procedure.
   DTC B1762 (ACU Coding Error) and B1102 (Battery Voltage Low) may be displayed simultaneously.

Variant coding Procedure

■ On-Line type on GDS

1. Ignition "OFF", connect GDS.
2. Ignition "ON" & Engine "OFF" select vehicle name and airbag system.
3. Select Variant coding mode.
4. Follow steps on the screen as below.

1) Initial ACU Variant Coding screen

mcx30.com

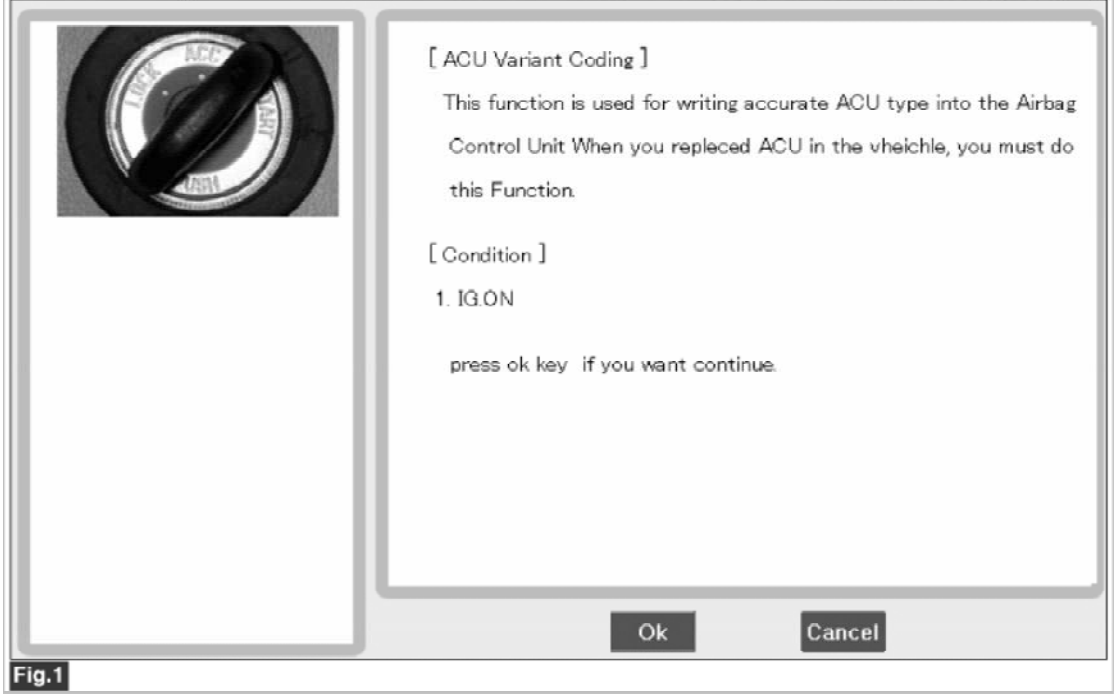

Fig.1

2) VIN Code entering screen

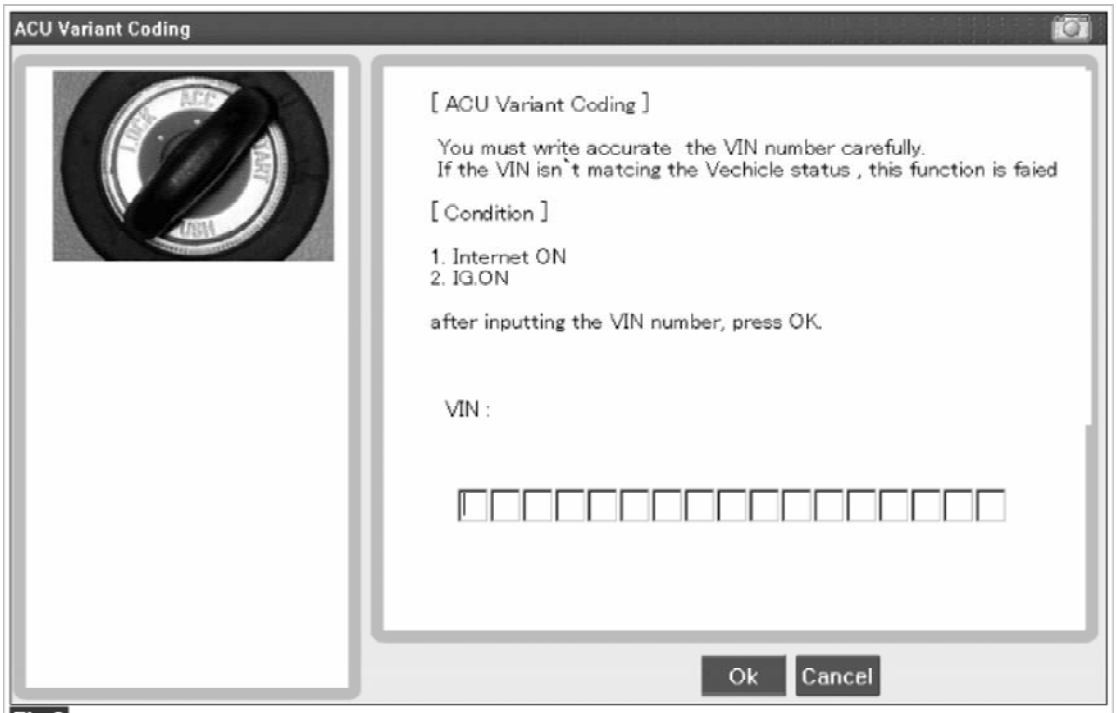

Fig.2

3) Variant coding's proceeding screen-1

mcx30.com

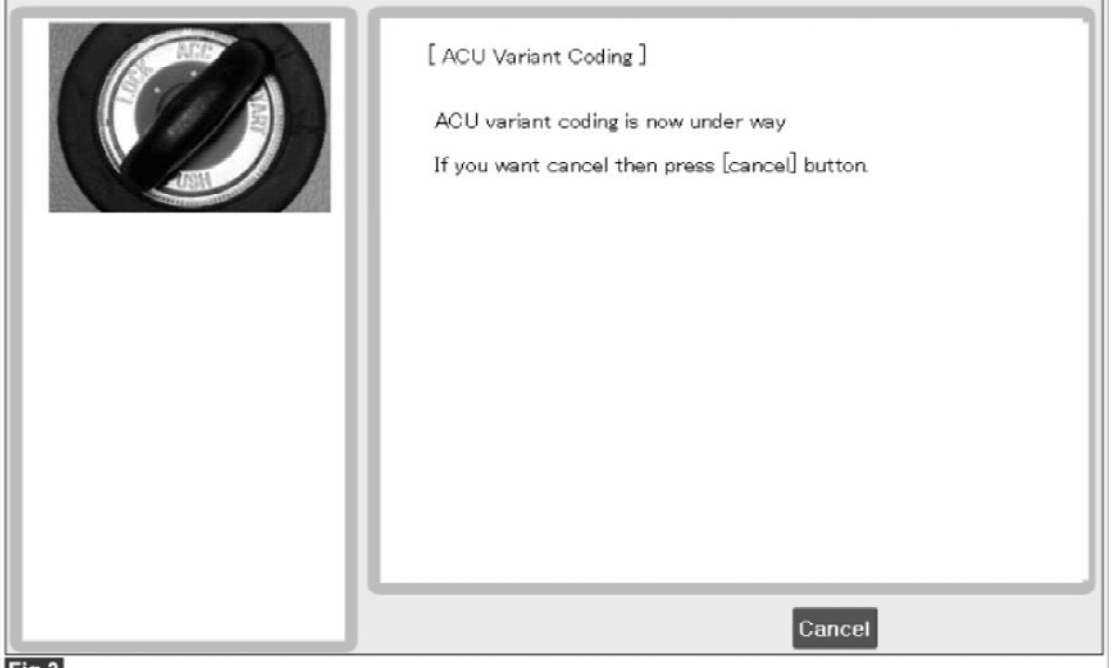

Fig.3

4) Variant coding's proceeding screen-2

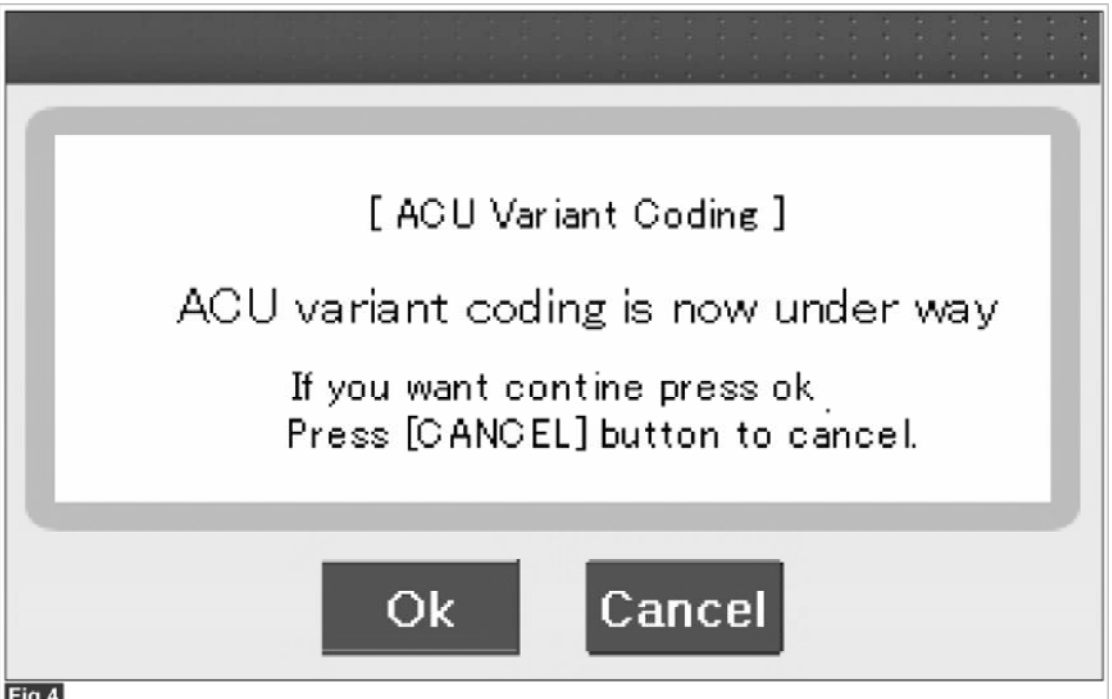

Fig.4

5) Variant coding is completed

mcx30.com

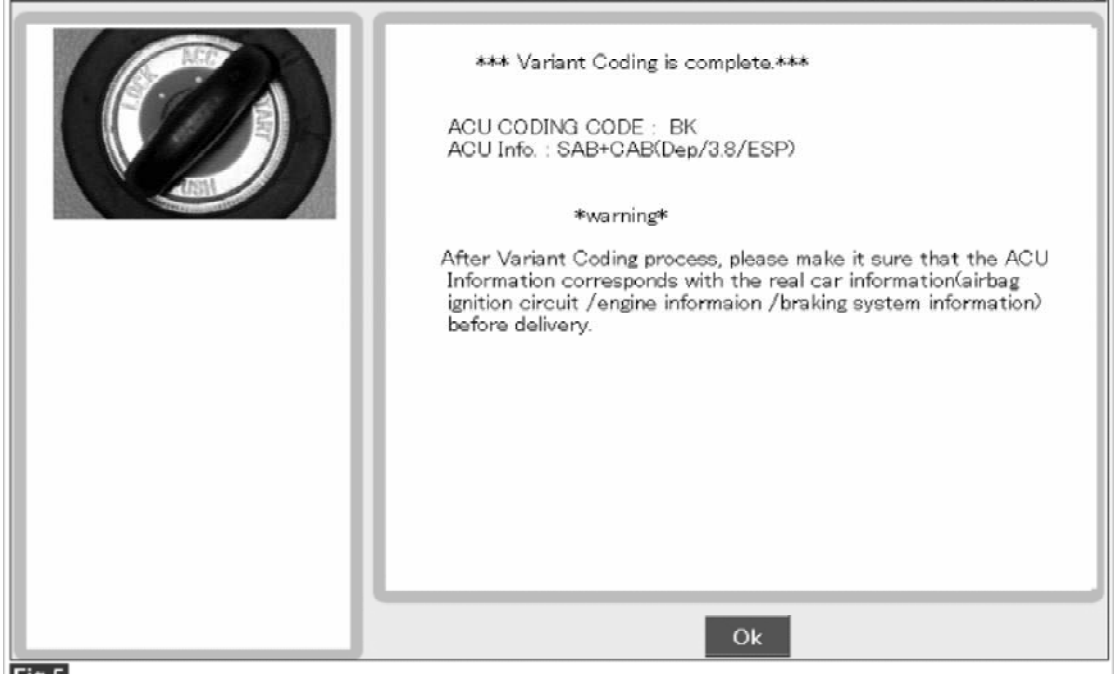

Fig.5

NOTE

1) This screen is opened when you try the variant coding again on the SRSCM which has bee performed variant coding.

Fig.6

2) Screen of communication failure

mcx30.com

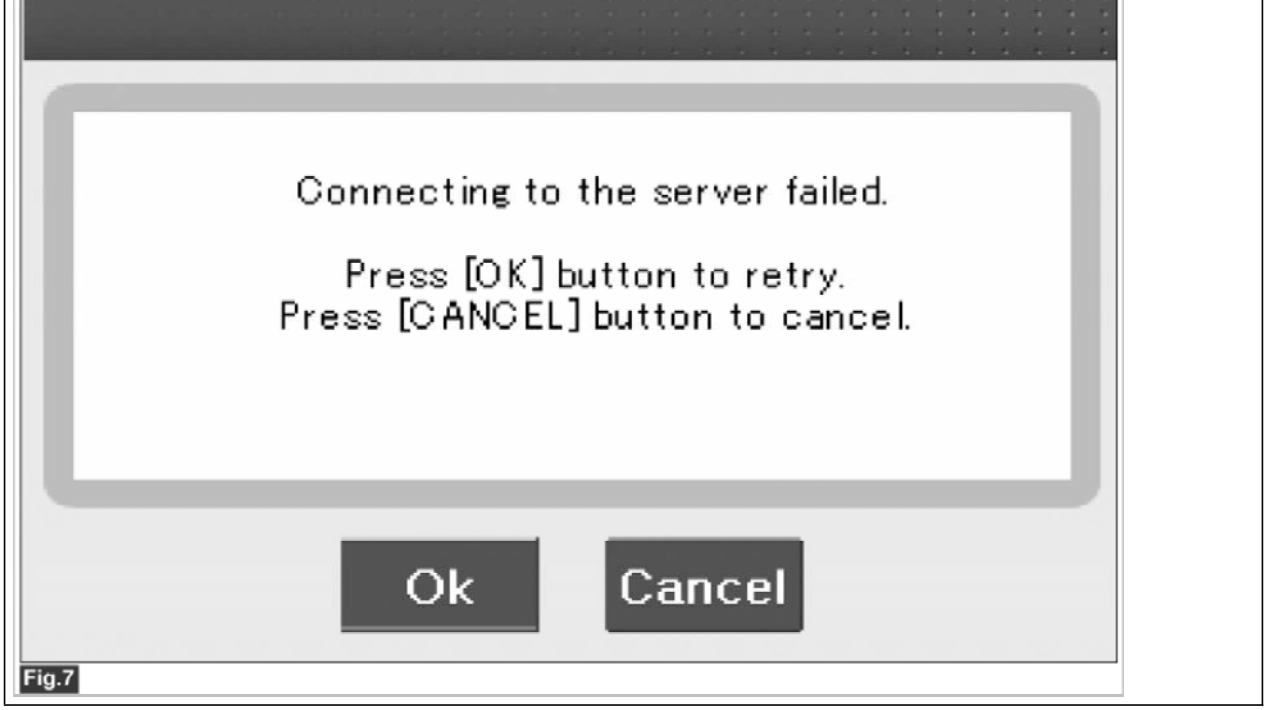

Fig.7

■ **Off-line type on GDS (This can be used when not connecting to internet)**

1) Initial ACU Variant Coding screen

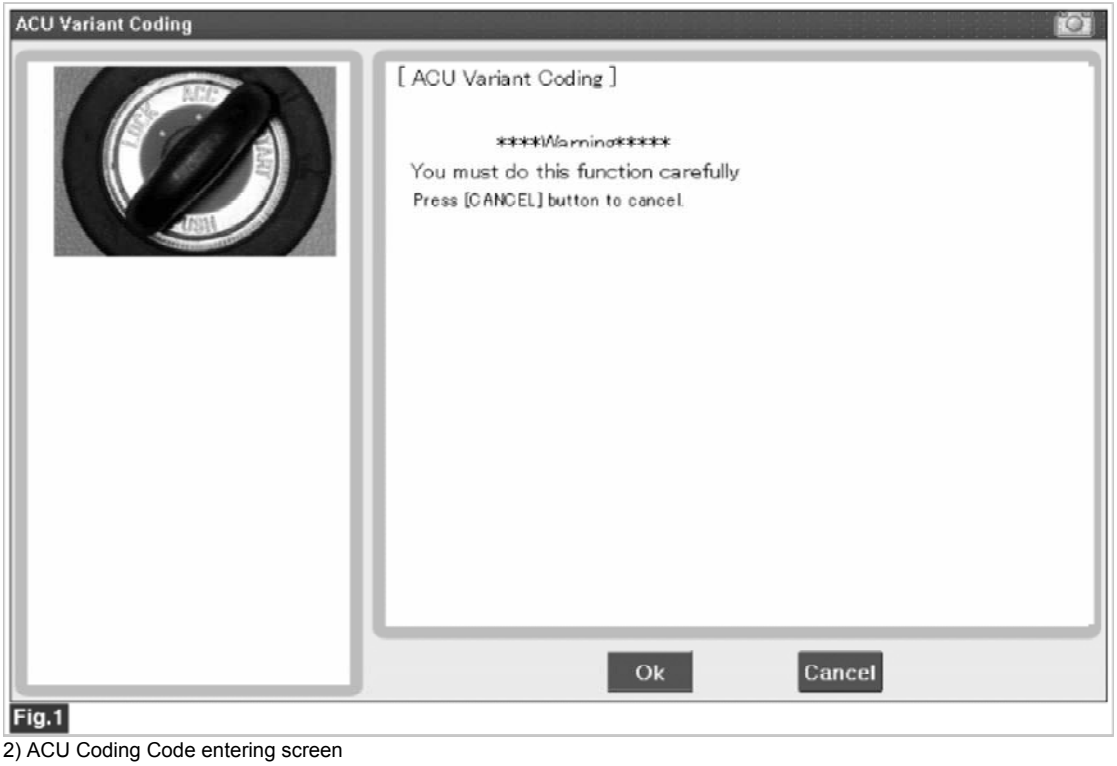

Fig.1

2) ACU Coding Code entering screen

mcx30.com

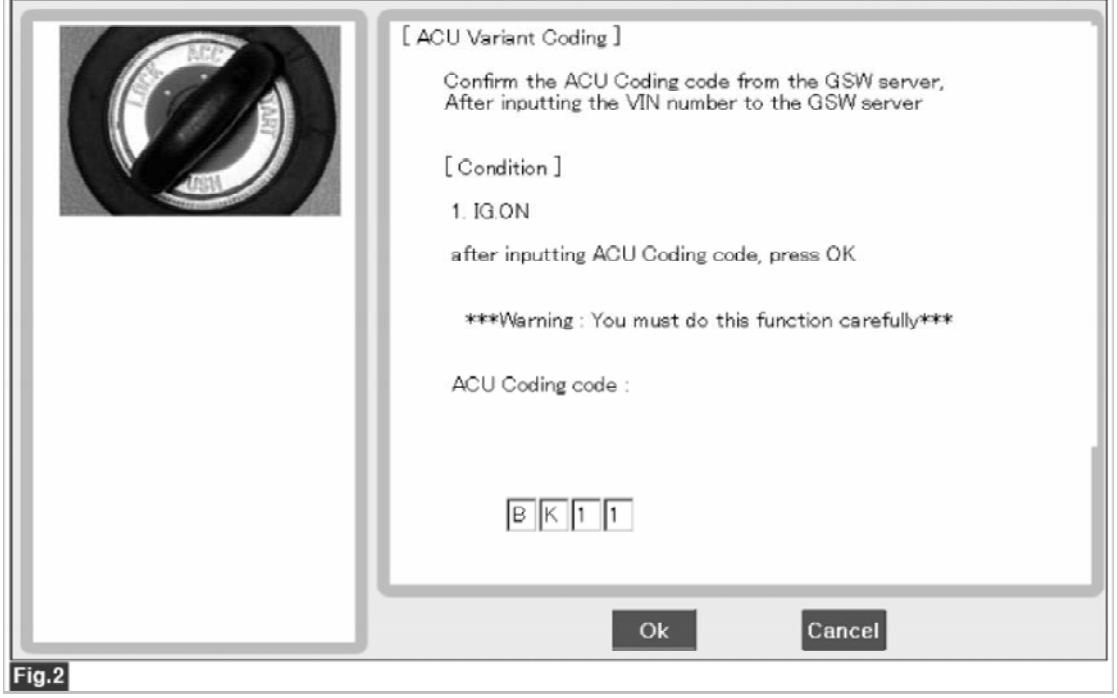

Fig.2

3) Screen of rechecking ACU Coding code's entering

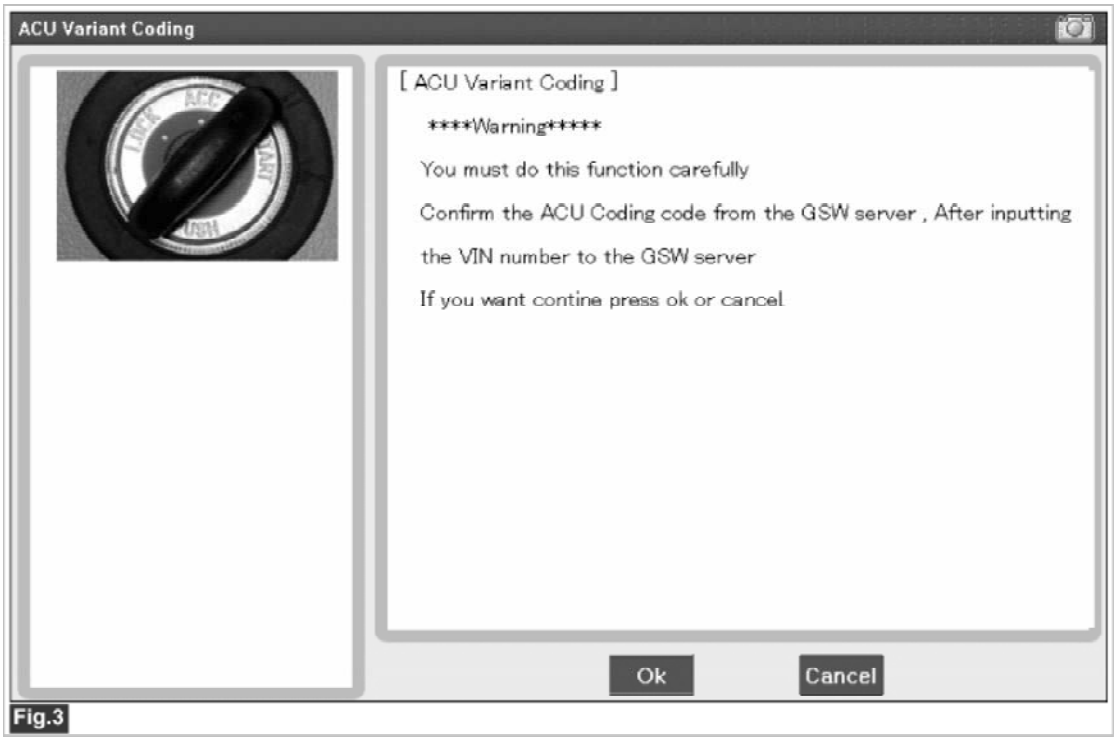

Fig.3

4) Variant coding's proceeding screen-1

mcx30.com

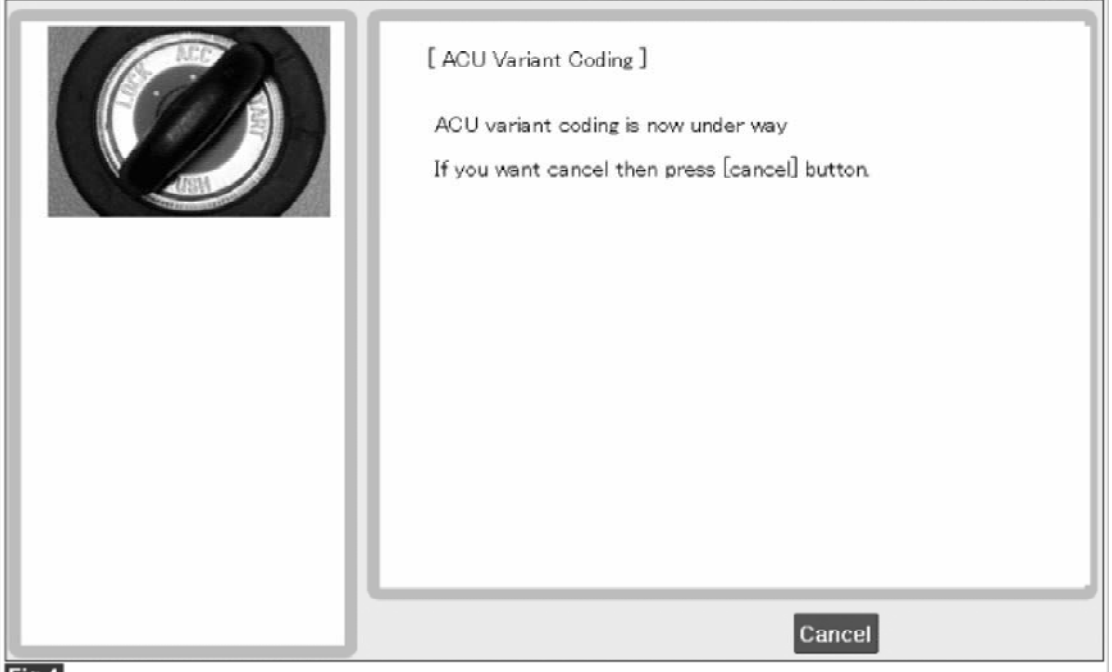

Fig.4

5) Variant coding's proceeding screen-2

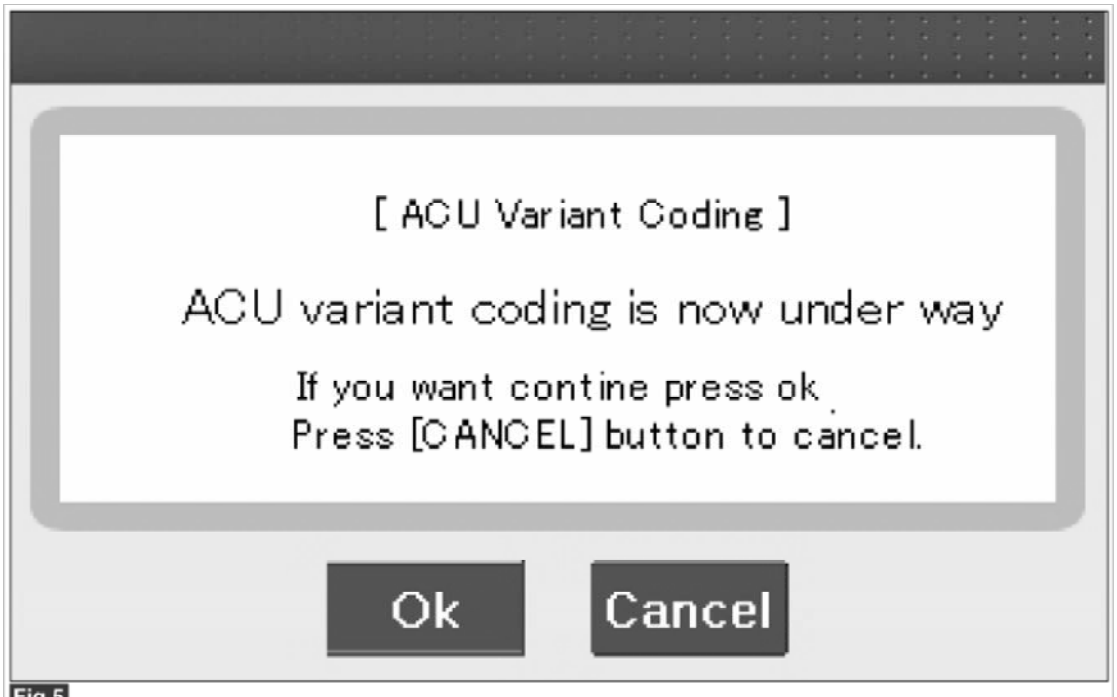

Fig.5

6) Variant coding is completed

mcx30.com

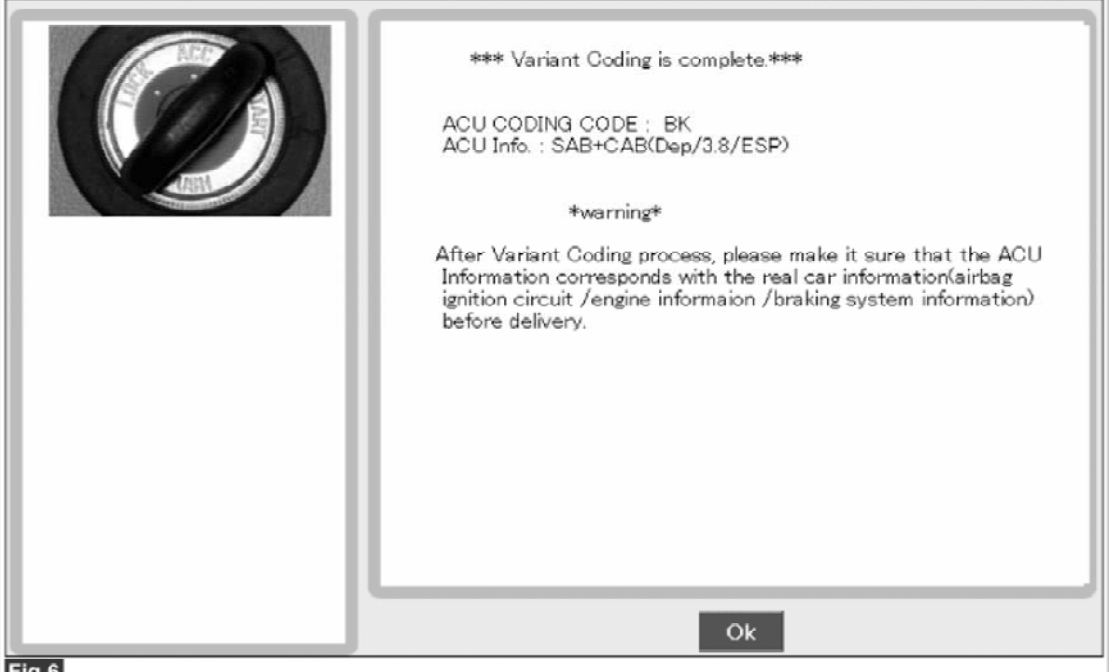

Fig.6

NOTE

1) This screen is opened when you try the variant coding again on the SRSCM which has bee performed variant coding.

Fig.7

Restraint > SRSCM > Front Impact Sensor (FIS) > Description and Operation

Description

The front impact sensor (FIS) is installed in the Front End Module (FEM). They are remote sensors that detect acceleration due to a collision at its mounting location. The primary purpose of the Front Impact Sensor (FIS) is to provide an indication of a collision. The Front Impact Sensor (FIS) sends acceleration data to the SRSCM.

Restraint > SRSCM > Front Impact Sensor (FIS) > Components and Components Location

Components

mcx30.com

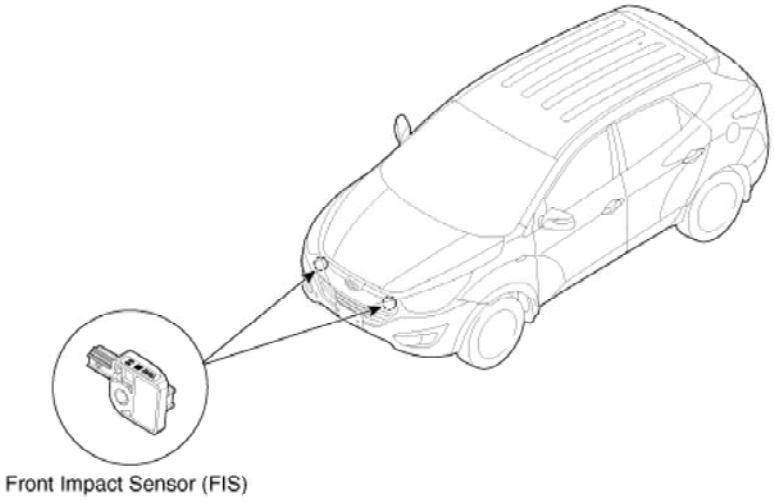

Restraint > SRSCM > Front Impact Sensor (FIS) > Repair procedures

Removal

CAUTION

- Removal of the airbag must be performed according to the precautions/ procedures described previously.
- Before disconnecting the front impact sensor connector, disconnect the front airbag connector(s).
- Do not turn the ignition switch ON and do not connect the battery cable while replacing the front impact sensor.

1. Disconnect the battery negative cable, and wait for at least three minutes before beginning work.
2. Disconnect the front impact sensor connector.

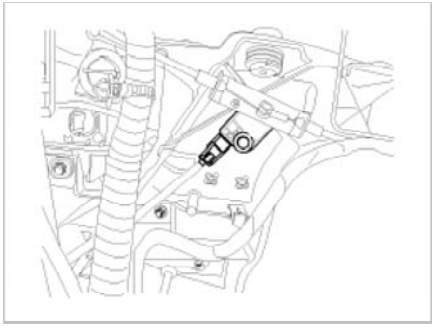

3. Remove the front impact sensor mounting bolt.
4. Remove the front impact sensor.

Installation

CAUTION

- Do not turn the ignition switch ON and do not contact the battery cable while replacing the front impact sensor.

1. Install the new front impact sensor.
2. Tighten the front impact sensor mounting bolt.

Tightening torque
: 7.0 ~ 9.0 Nm (0.7 ~ 0.9 kgf.m, 5.1 ~ 6.6 lb.ft)

3. Connect the front impact sensor connector.
4. Reconnect the battery negative cable.
5. After installing the Front Impact Sensor, confirm proper system operation:
   A. Turn the ignition switch ON; the SRS indicator light should be turned on for about six seconds and then go off.

mcx30.com

Restraint > SRSCM > Side Impact Sensor (SIS) > Description and Operation

Description

Side Impact Sensor (SIS) system consists of two P-SIS which are installed at each center of the front door module (LH and RH) and two SIS which are installed at each center pillar nearby (LH and RH).
Side Pressure Sensor is also called P-SIS because that detects pressure due to collision at its mounting location.
Side Impact Sensor is also called A-SIS because that detects acceleration.
SRSCM decides deployment or not of the airbag and the time of deployment through the collision signal of SIS when the collision occurred.

Restraint > SRSCM > Side Impact Sensor (SIS) > Components and Components Location

Components

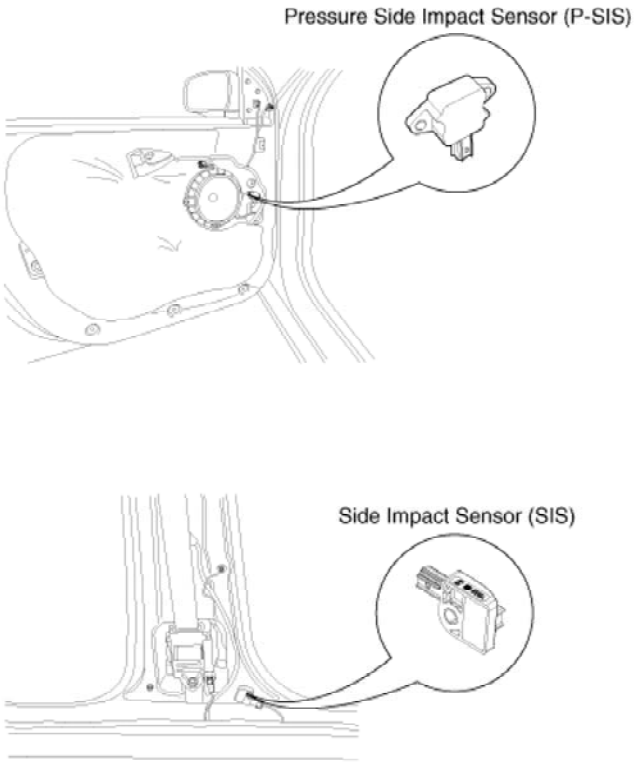

Restraint > SRSCM > Side Impact Sensor (SIS) > Repair procedures

Removal

Pressure Side Impact Sensor

CAUTION

- Removal of the airbag must be performed according to the precautions/procedures described previously.
- Before disconnecting the side impact sensor connector(s), disconnect the side airbag connector(s).
- Do not turn the ignition switch ON and do not connect the battery cable while replacing the side impact sensor.

1. Disconnect the battery negative cable, and wait for at least three minutes before beginning work.
2. Remove the front door trim. (Refer to the Body group- Front door)
3. Disconnect the front side impact sensor connector and remove the front side impact sensor mounting screws.

mcx30.com

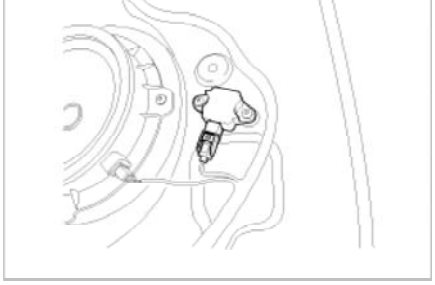

4. Remove the screw gromments (A).

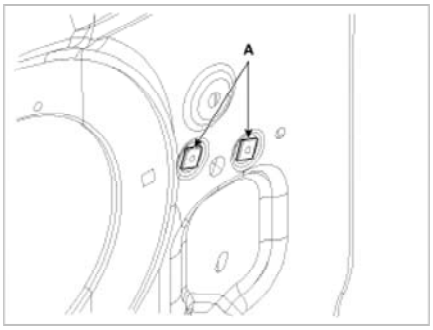

Side Impact Sensor

1. Disconnect the battery negative cable and wait for at least three minutes before beginning work.
2. Remove the lower anchor bolt.
3. Remove the door scuff trim. (Refer to the Body group - Interior trim)
4. Remove the center pillar trim. (Refer to the Body group - Interior trim)
5. Disconnect the side impact sensor connector.
6. Loosen the side impact sensor mounting bolt and remove the side impact sensor.

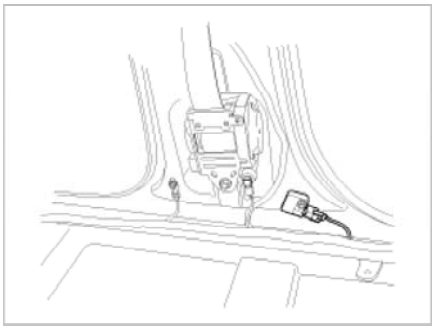

Installation

Pressure Side Impact Sensor

CAUTION

- Do not turn the ignition switch ON and do not connect the battery cable while replacing the side impact sensor.

1. Install the screw gromments (A).

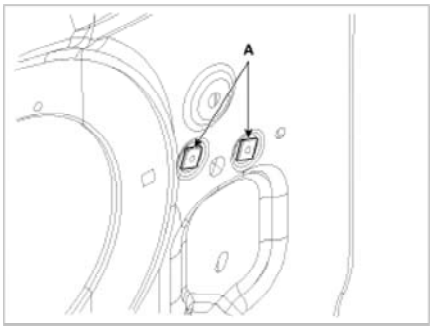

mcx30.com

- Do not reuse the screw grommets (A), whenever installing.

2. Install the new front side impact sensor with the screws then connect the pressure side impact sensor connector.

Tightening torque
: 1.1 ~ 1.3 Nm (0.11 ~ 0.13 kgf.m, 0.7 ~ 1.0 lb.ft)

3. Install the front door trim. (Refer to the Body group- Front door)
4. Reconnect the battery negative cable.
5. After installing the front side impact sensor, confirm proper system operation:
   A. Turn the ignition switch ON; the SRS indicator light should be turned on for about six seconds and then go off.

CAUTION

- You must comply with the specified tightening torques with the tool specified because Pressure – Side Impact Sensors (P-SIS) may be broken or screw gromment may be rotated.
- Problems may be occurred in the durability of P-SIS or impact sensing performance may be depreciated if screw gromment is rotated.
- The door module must not be transformed because SRSCM judges a impact through the pressure sensed in the door module.

Side Impact Sensor

CAUTION

- Do not turn the ignition switch ON and do not connect the battery cable while replacing the side impact sensor.

1. Install the new side impact sensor with the bolt then connect the side impact sensor connector.

Tightening torque
: 7.0 ~ 9.0 Nm (0.7 ~ 0.9 kgf.m, 5.1 ~ 6.6 lb.ft)

2. Install the center pillar trim (Refer to the Body group - Interior tirm)
3. Install the door scuff trim. (Refer to the Body group - Interior tirm)
4. Reconnect the battery negative cable.
5. After installing the Side Impact Sensor, confirm proper system operation:
   A. Turn the ignition switch ON; the SRS indicator light should be turned on for about six seconds and then go off.

Restraint > SRSCM > Seat Belt Buckle Switch (BS) > Description and Operation

Description

The SRSCM shall monitor the status of the driver and front passenger seat belt buckle. The SRSCM provides one pin each for the driver and front passenger seat belt buckle status input. The seat belt buckle circuit operates from internal boost voltage supplied by the SRSCM, and uses chassis ground for the signal return. The buckle status shall modify the SRSCM deployment. If the buckle status is unbuckled, the corresponding pretensioner will not be deactivated.

Restraint > SRSCM > Seat Belt Buckle Switch (BS) > Components and Components Location

Components

mcx30.com

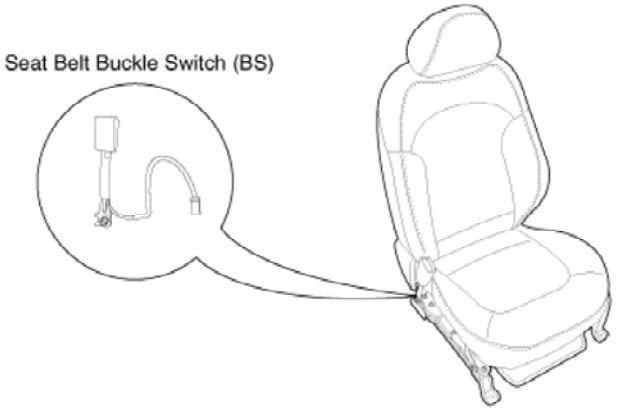

Restraint > SRSCM > Seat Belt Buckle Switch (BS) > Repair procedures

Removal

1. Disconnect the battery negative cable, and wait for at least three minutes before beginning work.
2. Remove the front seat assembly. (Refer to the Body group- Front seat)
3. Loosen the seat belt buckle mounting bolt and remove the seat belt buckle switch.

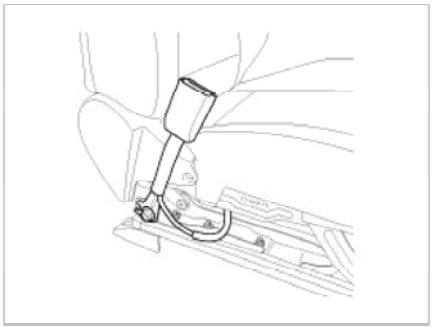

Installation

CAUTION

Be sure to install the harness wires not to be pinched or interfered with other parts.

1. Remove the ignition key from the vehicle.
2. Disconnect the battery negative cable, and wait for at least three minutes before beginning work.
3. Install the seat belt buckle switch.

Tightening Torque :
39.2 ~ 53.9 Nm (4.0 ~ 5.5 kgf.m, 28.9 ~39.8 lb.ft)

4. Install the front seat assembly. . (Refer to the Body group- Front seat)
5. Reconnect the battery negative cable.
6. After installing the seat belt buckle switch, confirm proper system operation:
   A. Turn the ignition switch ON; the SRS indicator should be turned on for about six seconds and then go off.

Restraint > SRSCM > Passive Occupant Detection System (PODS) > Description and Operation

Description

The system is intended to classify the occupancy status of the front passenger seat in a motor vehicle based upon the measured force on the bottom seat cushion.
The system also communicates to the SRSCM whether to allow or inhibit the deployment of the passenger airbags and/or pretensioner based upon this status.
The System also measured dynamic responses of the occupant. This information is used to identify when a child seat is cinched down tightly

mcx30.com

the proximity of the occupant to the inflator modules.
The system should not be confused with an occupant position recognition system, or any other occupant proximity sensor.
The Passive Occupant Detection System (PODS) utilizes bladder placed between the passenger seat cushion and suspension to measure the occupant's loading force on the passenger seat. The sensor mat is connected to smart digital pressure sensor which is mounted under the seat pan. The quantitative force determined by the system is compared to a given threshold for determination of passenger airbag suppression.

Restraint > SRSCM > Passive Occupant Detection System (PODS) > Components and Components Location

Components

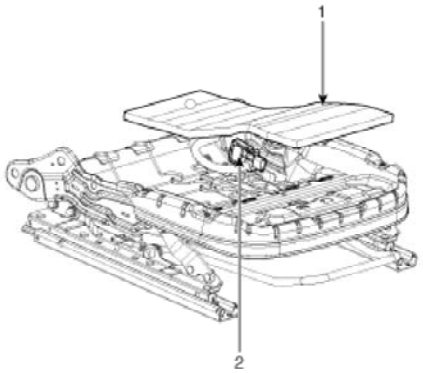

1. Sensor mat
2. PODS Uint

Restraint > SRSCM > Passive Occupant Detection System (PODS) > Repair procedures

Removal

1. Disconnect the battery negative cable, and wait for at least three minutes before beginning work.
2. Remove the front passenger seat assembly. (Refer to the Body group- Seat)
3. Remove the seat cushion as an assembly. (Refer to the Body group- Seat)

Installation

1. Install the PODS equipped seat cushion assembly. (Refer to the Body group- Seat)
2. Install the front passenger seat assembly.
   (Refer to the Body group - seat)
3. Reconnect the battery negative cable.
4. After installing the PODS, confirm proper system operation :
   A. Turn the ignition switch ON; the SRS indicator should be turned on for about six seconds and then go off.
   Telltale lamp will turn on for 4 seconds and be turned off for 3 seconds. After the 7 seconds, it shall remain off if the PODS does not require suppression and the passenger airbag is enabled.

NOTE

Be sure to perform PODS reset with scantool after replcacing PODS equipped seat cushion.

PODS Re-zero procedure

You should perform PODS Re-zero procedure after service or replacement about all part of the passenger seat.
1. Ignition “OFF”, connect GDS.
2. Ignition “ON” & Engine “OFF”, select Airbag system and “PODS Reset” mode.

mcx30.com

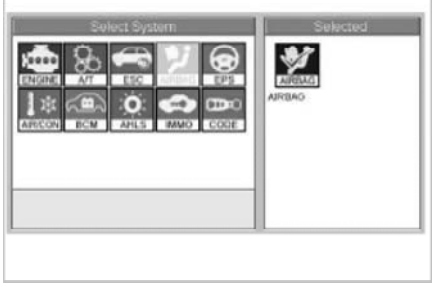

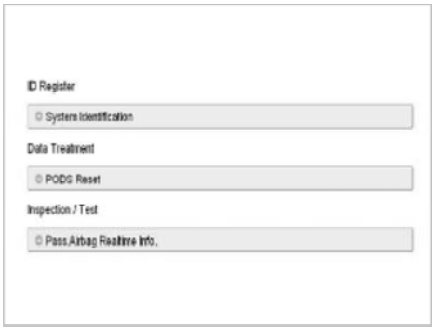

3. The GDS will show the two PODS RESET function steps.
   (1) Erase PODS diagnostic codes.
   (2) PODS initialization.

> **CAUTION**
>
> This step must be done PODS re-zero, when the front passenger seat is empty.

4. Press the OK button to erase the PODS related diagnostic codes.

5. Press OK button to initialize the PODS.

mcx30.com

This step must be done PODS re-zero, when the front passenger seat is empty.

6. The PODS initialization procedure will be performed.

7. Check PODS situation with selecting " Pass. Airbag Realtime Info" after performing PODS Reset procedure.

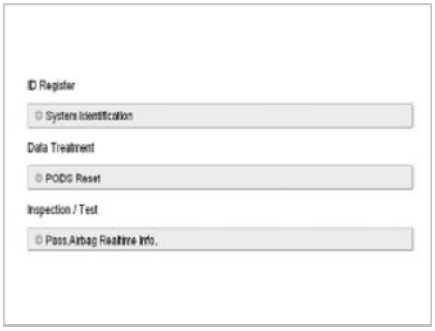

8. Perform inspection with pressing OK button.

9. Finish the procedure with pressing cancel button if there is no problem after inspecting each status as below.

mcx30.com

Restraint > SRSCM > Schematic Diagrams

Circuit Diagram (1)

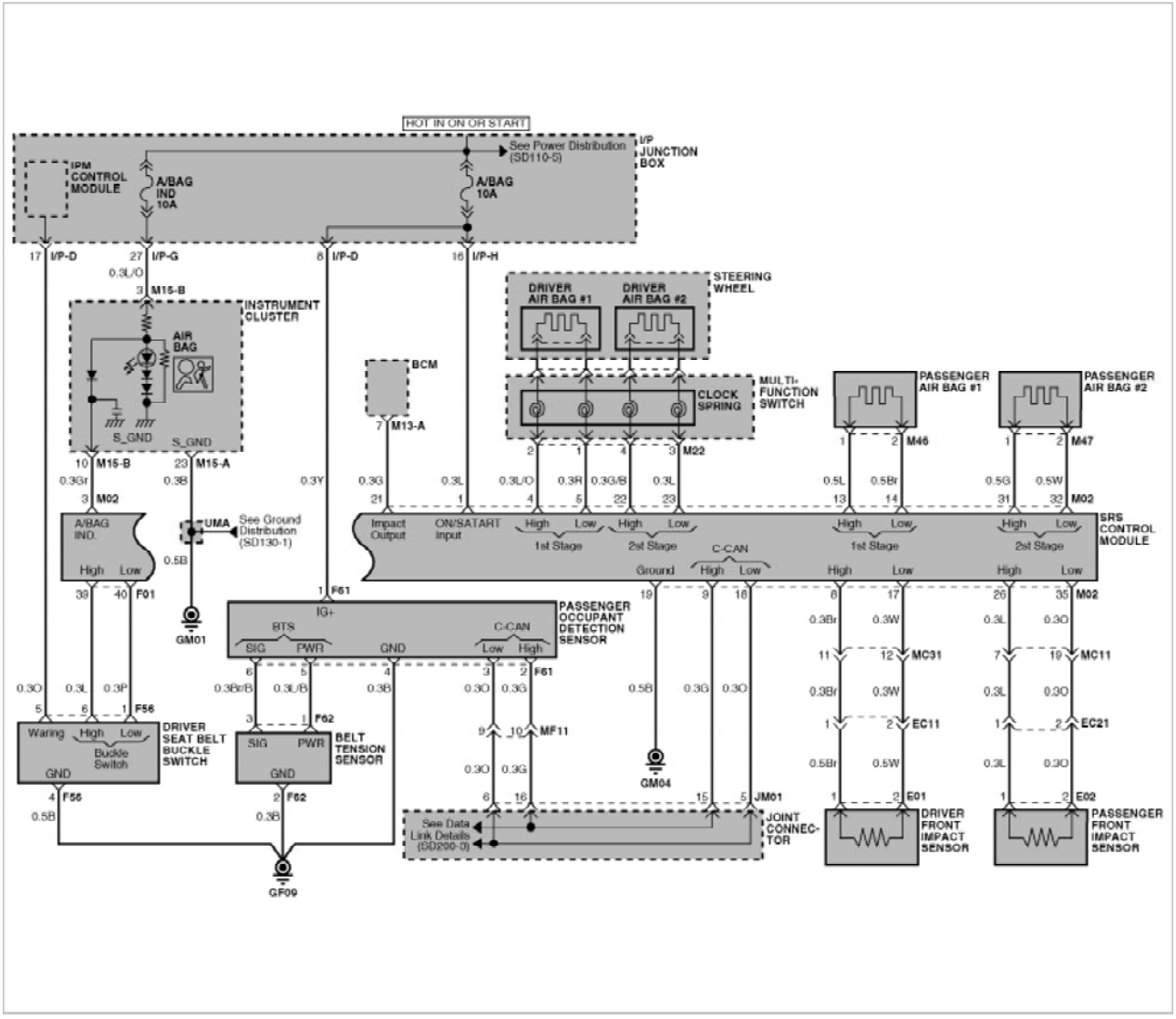

Circuit Diagram (2)

mcx30.com

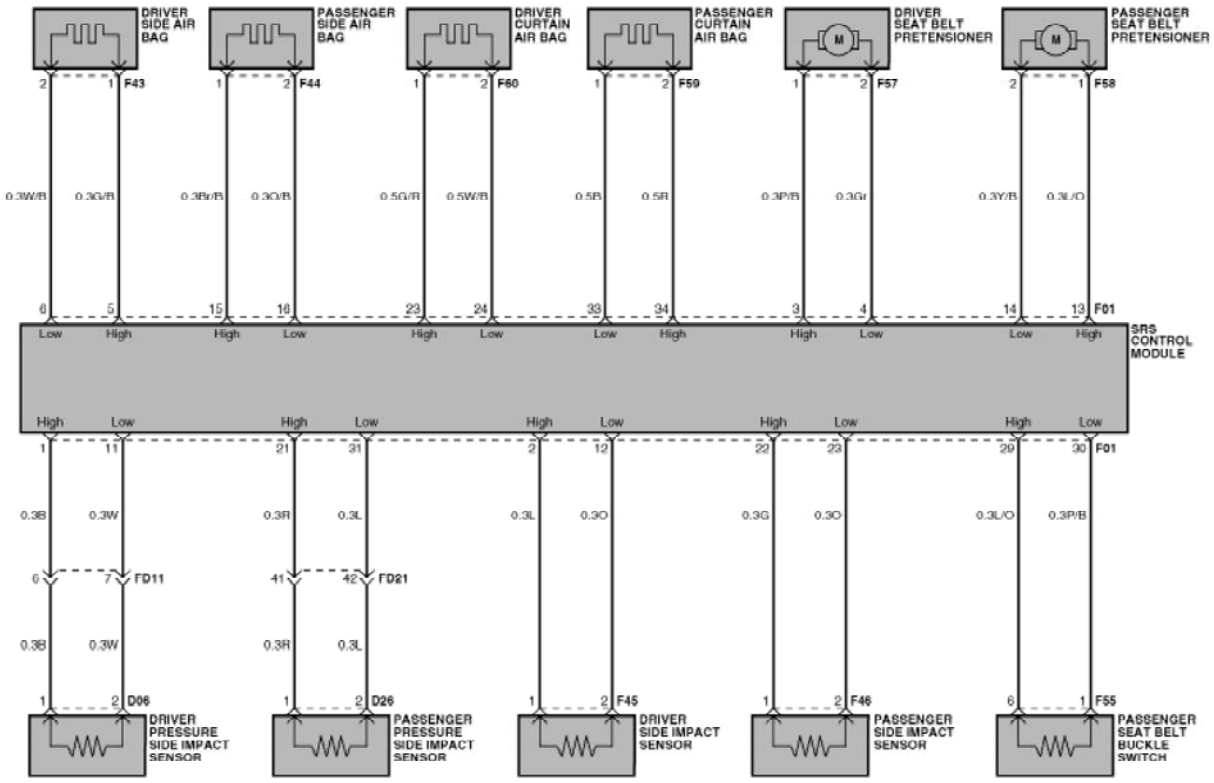

Harness Connector

Connector A

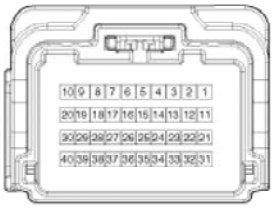

Connector B

Pin	Function (Connector A)	Pin	Function (Connector A)
1	Ignition	1	Pressure side impact sensor [Driver] High
2	-	2	Side impact sensor [Driver] High
3	Airbag warning lamp	3	Seat belt pretensioner [Driver] High
4	(1st stage) Driver airbag High	4	Seat belt pretensioner [Driver] Low
5	(1st stage) Driver airbag Low	5	Side airbag [Driver] High
6	-	6	Side airbag [Driver] Low
7	-	7	-
8	Front impact sensor [Driver] High	8	-
9	CAN_High	9	-
10	-	10	-

mcx30.com

12	Telltale warning lamp	12	Side impact sensor [Driver] Low
13	(1st stage) Passenger airbag High	13	Seat belt pretensioner [Passenger] High
14	(1st stage) Passenger airbag Low	14	Seat belt pretensioner [Passenger] Low
15	-	15	Side airbag [Passenger] High
16	-	16	Side airbag [Passenger] Low
17	Front impact sensor [Driver] Low	17	-
18	CAN_Low	18	-
19	Ground	19	-
20	-	20	-
21	Crash Output	21	Pressure side impact sensor [Passenger] High
22	(2nd stage) Driver airbag High	22	Side impact sensor [Passenger] High
23	(2nd stage) Driver airbag Low	23	Curtain airbag [Driver] High
24	-	24	Curtain airbag [Driver] Low
25	-	25	-
26	Front impact sensor [Passenger] High	26	-
27	-	27	-
28	-	28	-
29	-	29	Seat buckle switch [Passenger] High
30	-	30	Seat buckle switch [Passenger] Low
31	(2nd stage) Passenger airbag High	31	Pressure side impact sensor [Passenger] Low
32	(2nd stage) Passenger airbag Low	32	Side impact sensor [Passenger] Low
33	-	33	Curtain airbag [Passenger] High
34	-	34	Curtain airbag [Passenger] Low
35	Front impact sensor [Passenger] Low	35	-
36	-	36	-
		37	Body ground
		38	-
		39	Seat buckle switch [Driver] High
		40	Seat buckle switch [Driver] Low

Restraint > Airbag Module > Driver Airbag (DAB) Module and Clock Spring > Description and Operation

Description

Driver Airbag (DAB) is installed in the steering wheel and electrically connected to SRSCM via the clock spring. It protects the driver by deploying the airbag when frontal crash occurs. The SRSCM determines deployment of the Driver Airbag (DAB).

CAUTION

Never attempt to measure the circuit resistance of the airbag module (squib) even if you are using the specified tester. If the circuit resistance is measured with a tester, accidental airbag deployment will result in serious personal injury.

Restraint > Airbag Module > Driver Airbag (DAB) Module and Clock Spring > Components and Components Location

Components

mcx30.com

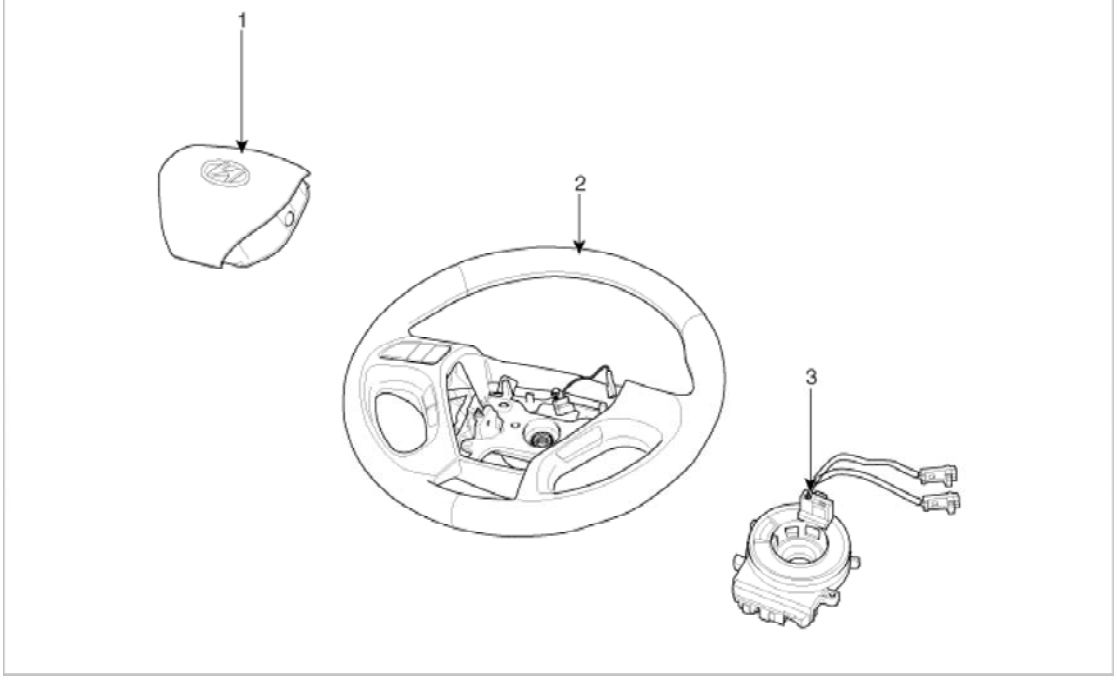

1. Driver Airbag (DAB)
2. Steering Wheel
3. Clock Spring

Restraint > Airbag Module > Driver Airbag (DAB) Module and Clock Spring > Repair procedures

Removal

1. Disconnect the battery negative cable and wait for at least three minutes before beginning work.
2. Remove the airbag module mounting bolts (2EA).

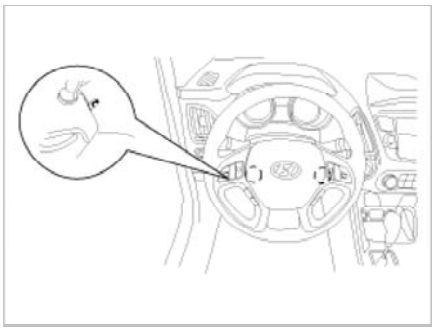

3. Remove the wiring fixing clip(C) and disconnect the horn connector (A).

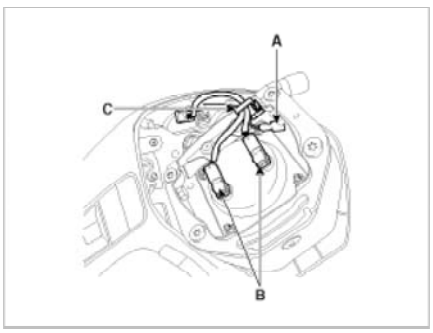

4. Release the connector locking pin, then disconnect the driver airbag module connector(B).

> **CAUTION**
>
> The removed airbag module should be stored in aclean, dry place with the pad cover facing up.

5. Remove the steering wheel and steering wheel column cover. (Refer to the Steering System group- Steering Column and Shaft)

mcx30.com

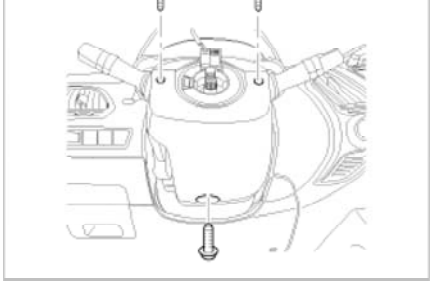

6. Disconnect the clock spring and horn connector, then remove the clock spring.

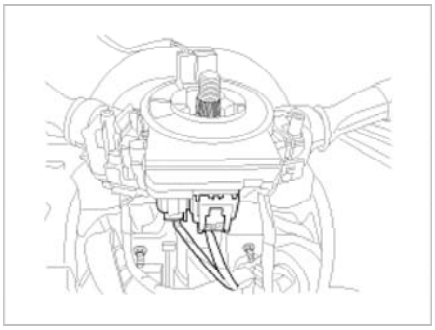

Inspection

Driver Airbag (DAB)

If any improper parts are found during the following inspection, replace the airbag module with a new one.

> CAUTION
>
> Never attempt to measure the circuit resistance of the airbag module (squib) even if you are using the specified tester. If the circuit resistance is measured with a tester, accidental airbag deployment will result in serious personal injury.

1. Check pad cover for dents, cracks or deformities.
2. Check the airbag module for denting, cracking or deformation.
3. Check hooks and connectors for damage, terminals for deformities, and harness for binds.
4. Check airbag inflator case for dents, cracks or deformities.

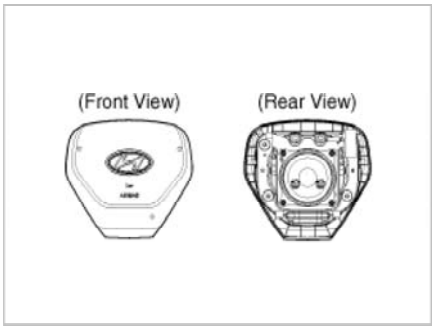

5. Install the airbag module to the steering wheel to check for fit or alignment with the wheel.

Clock Spring

1. If, as a result of the following checks, even one abnormal point is discovered, replace the clock spring with a new one.
2. Check connectors and protective tube for damage, and terminals for deformities.

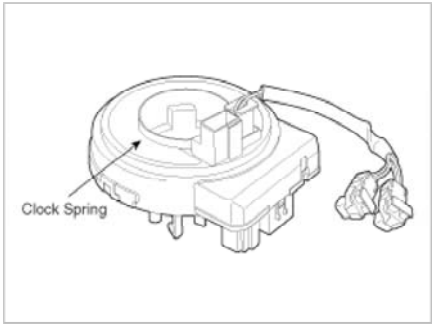

mcx30.com

Installation

1. Remove the ignition key from the vehicle.
2. Disconnect the battery negative cable from battery and wait for at least three minutes before beginning work.
3. Connect the clock spring harness connector and horn harness connector to the clock spring.
4. Set the center position by setting the marks between the clock spring and the cover into line. Make an array the mark (▸◂) by turning the clock spring clockwise to the stop and then 2.0 revolutions counterclockwise.

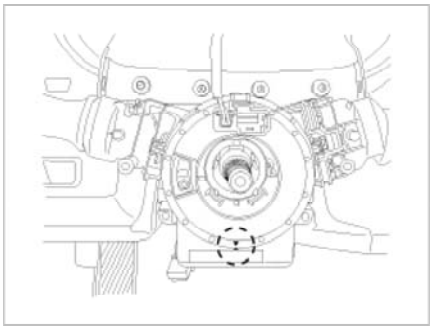

5. Install the steering wheel column cover and the steering wheel. (Refer to the Steering System group- Steering Column and Shaft)
6. Connect the Driver Airbag (DAB) module connector and horn connector, and then install the Driver Airbag (DAB) module on the steering wheel.
7. Secure the Driver Airbag (DAB) with the new mounting bolts.

Tightening torque
: 7.8 ~ 10.8 Nm (0.8 ~ 1.1 kgf.m, 5.1 ~ 8.0 lb.ft)

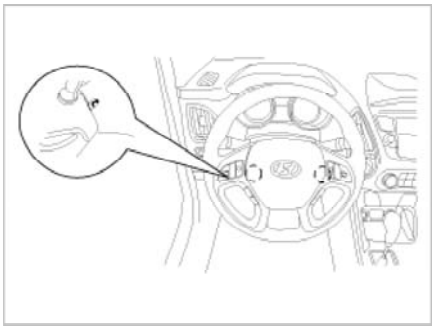

8. Connect the battery negative cable.
9. After installing the airbag, confirm proper system operation:
   A. Turn the ignition switch ON; the SRS indicator light should be turned on for about six seconds and then go off.
   B. Make sure horn button works.

Restraint > Airbag Module > Passenger Airbag (PAB) Module > Description and Operation

Description

The passenger airbag (PAB) is installed inside the crash pad and protects the front passenger in the event of a frontal crash. The SRSCM determines if and when to deploy the PAB.

CAUTION

Never attempt to measure the circuit resistance of the airbag module (squib) even if you are using the specified tester. If the circuit resistance is measured with a tester, accidental airbag deployment will result in serious personal injury.

Restraint > Airbag Module > Passenger Airbag (PAB) Module > Components and Components Location

Components

mcx30.com

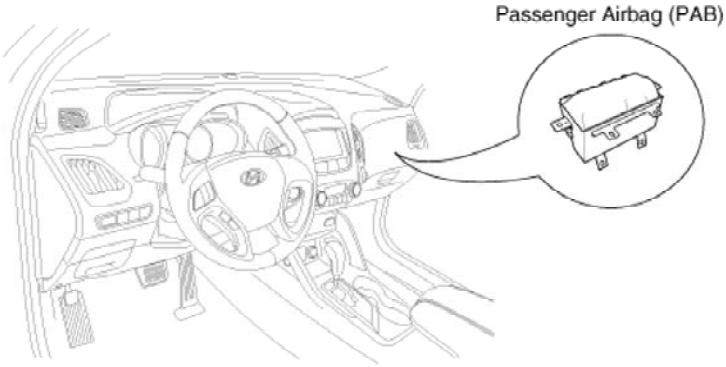

Restraint > Airbag Module > Passenger Airbag (PAB) Module > Repair procedures

Removal

1. Disconnect the battery negative cable and wait for at least three minutes before beginning work.
2. Remove the glove box housing. (Refer to the Body group- crash pad).
3. Disconnect the passenger airbag connector and remove the PAB mounting bolt.

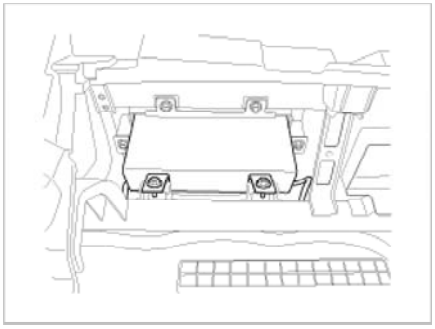

4. Remove the crash pad. (Refer to the Body group- crash pad).

> NOTE
>
> Replace the crash pad which is damaged while PAB is deployed.

5. Remove the heater duct from the crash pad.
6. Remove the mounting nuts(4EA) from the crash pad. Then remove the passenger airbag.

> CAUTION
>
> The removed airbag module should be stored in a clean, dry place with the airbag cushion up.

Installation

1. Remove the ignition key from the vehicle.
2. Disconnect the battery negative cable from battery and wait for at least three minutes before beginning work.
3. Place a passenger airbag on the crash pad and tighten the passenger airbag mounting bolts.

Tightening torque
: 5.9 ~ 6.9 Nm (0.6 ~ 0.7 kgf.m, 4.3 ~ 5.1 lb.ft)

mcx30.com

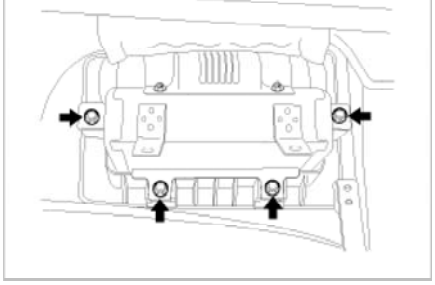

4. Install the heater duct to the crash pad.
5. Install the crash pad. (Refer to the Body group- crash pad)
6. Tighten the passenger airbag mounting bolt.

Tightening torque
: 18.6 ~ 26.5 Nm (1.9 ~ 2.7 kgf.m, 13.7 ~ 19.2 lb.ft)

7. Connect the passenger airbag harness connector to the SRS main harness connector.
8. Reinstall the glove box. (Refer to the Body group- crash pad)
9. Reconnect the battery negative cable.
10. After installing the passenger airbag (PAB), confirm proper system operation:
    A. Turn the ignition switch ON; the SRS indicator light should be turned on for about six seconds and then go off.

Restraint > Airbag Module > Side Airbag (SAB) Module > Description and Operation

Description

The Side Airbags (SAB) are installed inside the front seat and protects the driver and passenger from danger when side crash occurs. The SRSCM determines deployment of side airbag by using Side Impact Sensor (SIS) signal.

CAUTION

Never attempt to measure the circuit resistance of the airbag module (squib) even if you are using the specified tester. If the circuit resistance is measured with a tester, accidental airbag deployment will result in serious personal injury.

Restraint > Airbag Module > Side Airbag (SAB) Module > Components and Components Location

Components

Restraint > Airbag Module > Side Airbag (SAB) Module > Repair procedures

Removal

NOTE

The side airbag cannot be disassembled from the seat back assembly, so replace assembly when replacing the side airbag.

mcx30.com

2. Remove the front seat assembly. (Refer to the Body group- Seat)
3. Remove the seat back assembly. (Refer to the Body group- Seat)

Installation

CAUTION

Be sure to install the harness wires not to be pinched or interfered with other parts.

NOTE

- Do not open the lid of the side airbag cover.
- Make sure that the airbag assembly cover is installed properly. Improper installation may prevent the proper deployment.

1. Remove the ignition key from the vehicle.
2. Disconnect the battery negative cable and wait for at least three minutes.
3. Install the new seat back assembly.
   (Refer to the Body group - Seat)
4. Install the front seat assembly.
   (Refer to the Body group - Seat)
5. Recline and slide the front seat forward fully, make sure the harness wires are not pinched of interfering with other parts.
6. Reconnect the battery negative cable.
7. After installing the side airbag (SAB), confirm proper system operation:
   A. Turn the ignition switch ON; the SRS indicator light should be turned on for about six seconds and then go off.

Restraint > Airbag Module > Curtain Airbag (CAB) Module > Description and Operation

Description

Curtain airbags are installed inside the headliner (LH and RH) and protect the driver and passenger from danger when side crash occurs. The SRSCM determines deployment of curtain airbag by using side impact sensor (SIS) signal.

CAUTION

Never attempt to measure the circuit resistance of the airbag module even if you are using the specified tester. If the circuit resistance is measured with a tester, accidental airbag deployment will result in serious personal injury.

Restraint > Airbag Module > Curtain Airbag (CAB) Module > Components and Components Location

Components

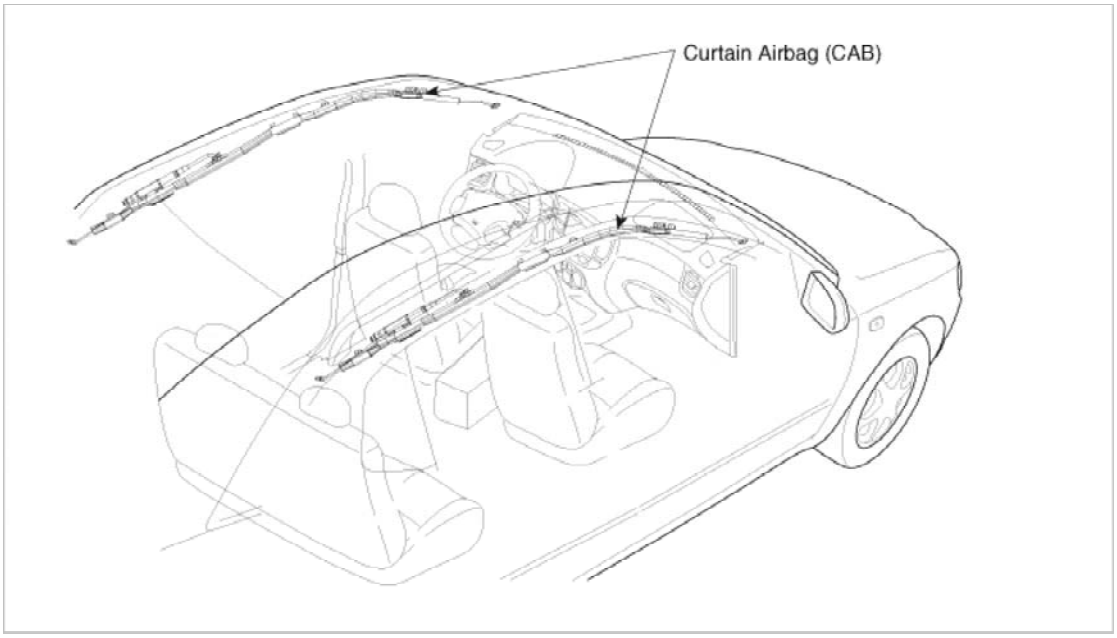

Restraint > Airbag Module > Curtain Airbag (CAB) Module > Repair procedures

mcx30.com

1. Disconnect the battery negative cable and wait for at least 3 minutes before beginning work.
2. Remove the roof trim. (Refer to the Body group- Interior)
3. Disconnect the curtain airbag harness connector.

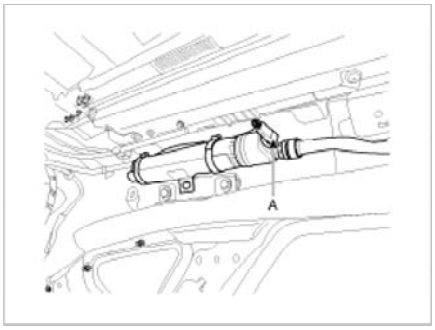

4. After loosening the mounting bolts and nuts remove the curtain airbag.

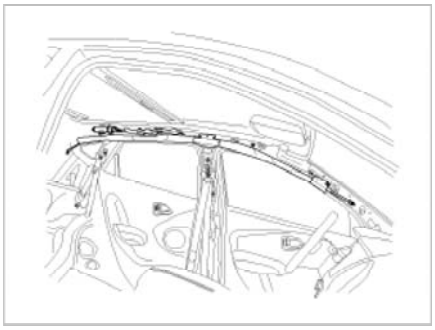

Installation

1. Remove the ignition key from the vehicle.
2. Disconnect the battery negative cable and wait for at least three minutes.
3. Tighten the curtain airbag mounting bolts.

Tightening torque
: 7.0 ~ 9.0 Nm (0.7 ~ 0.9 kgf.m, 5.1 ~ 6.6 lb.ft)

CAUTION

- Never twist the airbag module when installing it. If the module is twisted, airbag module may operate abnormally.

4. Connect the curtain airbag connector.
5. Install the roof trim. (Refer to the Body group- Interior)
6. Reconnect the battery negative cable.
7. After installing the curtain airbag (CAB), confirm proper system operation:
   A. Turn the ignition switch ON; the SRS indicator light should be turned on for about six seconds and then go off.

Restraint > Airbag Module > Airbag Module Disposal > Description and Operation

Airbag Disposal

Special Tool Required

Deployment tool 0957A-34100A
Before scrapping any airbags or side airbags (including those in a whole vehicle to be scrapped), the airbags or side airbags must be deployed. If the vehicle is still within the warranty period, before deploying the airbags or side airbags, the Technical Manager must give approval and/or special instruction. Only after the airbags or side airbags have been deployed (as the result of vehicle collision, for example), can they be scrapped. If the airbags or side airbags appear intact (not deployed), treat them with extreme caution. Follow this procedure.

Deploying Airbags In The Vehicle

If an SRS equipped vehicle is to be entirely scrapped, its airbags or side airbags should be deployed while still in the vehicle. The airbags or side airbags should not be considered as salvageable parts and should never be installed in another vehicle.

1. Turn the ignition switch OFF, and disconnect the battery negative cable and wait at least three minutes.
2. Confirm that each airbag or side airbag is securely mounted.
3. Confirm that the special tool is functioning properly by following the check procedure.

mcx30.com

B. Install the driver's airbag on the steering wheel.

(2) Front Passenger's Airbag :
A. Remove the glove box housing, and then disconnect the connector between the front passenger's airbag and SRS main harness.
B. Install the SST(0957A-38510).

(3) Side Airbag :
A. Disconnect the 2P connector between the side airbag and wire harness.
B. Install the SST (0957A-3F100).

(4) Curtain Airbag :
A. Disconnect the 2P connector between the curtain airbag and wire harness.
B. Install the SST (0957A-38500).

(5) Seat Belt Pretensioner :
A. Disconnect the 2P connector from the seat belt pretensioner.
B. Install the SST (0957A-38500).

4. Place the deployment tool at least thirty feet (10meters) away from the airbag.
5. Connect a 12 volt battery to the tool.
6. Push the tool's deployment switch. The airbag should deploy (deployment is both highly audible and visible: a loud noise and rapid inflation of the bag, followed by slow deflation)
7. Dispose of the complete airbag. No parts can be reused. Place it in a sturdy plastic bag and seal it securely.

Deploying the Airbag Out of the Vehicle

If an intact airbag has been removed from a scrapped vehicle, or has been found defective or damage during transit, storage or service, it should be deployed as follows:

1. Confirm that the special is functioning properly by following the check procedure on this page.
2. Position the airbag face up, outdoors on flat ground at least thirty feet (10meters) from any obstacles or people.

Disposal of Damaged Airbag

1. If installed in a vehicle, follow the removal procedure of driver's airbag front passenger's and side airbag.
2. In all cases, make a short circuit by twisting together the two airbag inflator wires.
3. Package the airbag in exactly the same packing that the new replacement part come in.

Restraint > Seat Belt Pretensioner > Seat Belt Pretensioner (BPT) > Description and Operation

Description

The Seat Belt Pretensioners (BPT) are installed inside Center Pillar (LH & RH). When a vehicle crashes with a certain degree of frontal impact, the pretensioner seat belt helps to reduce the severity of injury to the front seat occupants by retracting the seat belt webbing. This prevents the front occupants from thrusting forward and hitting the steering wheel or the instrument panel when the vehicle crashes.

CAUTION

Never attempt to measure the circuit resistance of the Seat Belt Pretensioner (BPT) even if you are using the specified tester. If the circuit resistance is measured with a tester, the pretensioner will be ignited accidentally. This will result in serious personal injury.

Restraint > Seat Belt Pretensioner > Seat Belt Pretensioner (BPT) > Components and Components Location

Components

mcx30.com

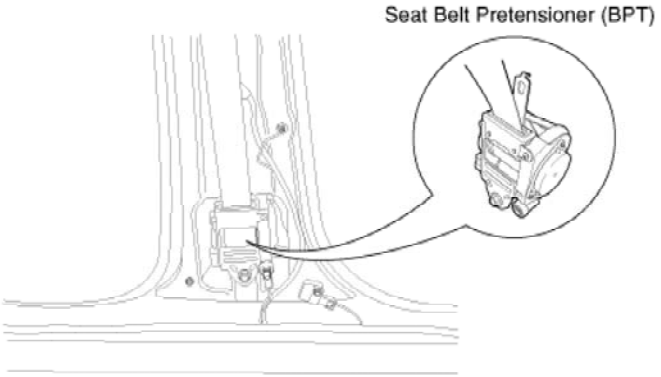

Restraint > Seat Belt Pretensioner > Seat Belt Pretensioner (BPT) > Repair procedures

Removal

1. Disconnect the battery negative cable, and wait for at least three minutes before beginning work.
2. Remove the lower anchor bolt.
3. Remove the following parts. (Refer to the Body group- Interior trim)
   A. Door scuff trim
   B. Center pillar trim
4. Remove the upper anchor bolt.
5. Disconnect the Seat Belt Pretensioner connector.

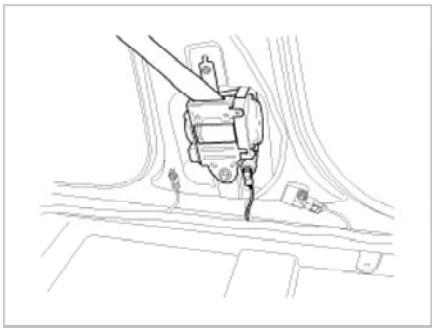

6. Loosen the Seat Belt Pretensioner mounting bolt and remove the Seat Belt Pretensioner.

Installation

1. Remove the ignition key from the vehicle.
2. Disconnect the battery negative cable and wait for at least three minutes.
3. Install the Seat Belt Pretensioner (BPT) with a bolt.

Tightening torque
Bolt B: 39.2 ~ 53.9 Nm (4.0 ~ 5.5 kgf.m, 28.9 ~39.8 lb.ft)

4. Connect the Seat Belt Pretensioner (BPT) connector.
5. Install the upper anchor bolts.

Tightening torque
: 39.2 ~ 53.9 Nm (4.0 ~ 5.5 kgf.m, 28.9 ~39.8 lb.ft)

6. Install the following parts. . (Refer to the Body group- Interior trim)
   A. Center pillar trim
   B. Door scuff trim
7. Install the lower anchor bolts.

Tightening torque

mcx30.com

8. Reconnect the battery negative cable.
9. After installing the Seat Belt Pretensioner (BPT), confirm proper system operation:
   A. Turn the ignition switch ON; the SRS indicator light should be turned on for about six seconds and then go off.

mcx30.com